MONROE

T 0012

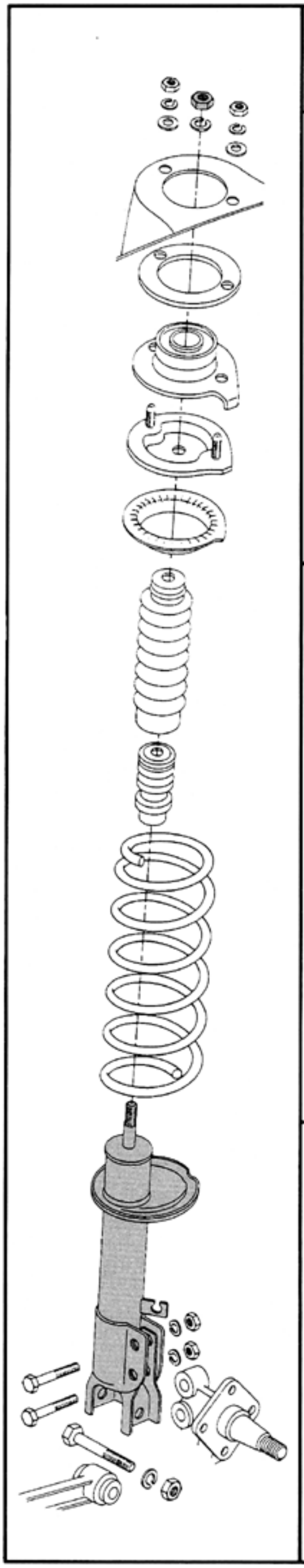

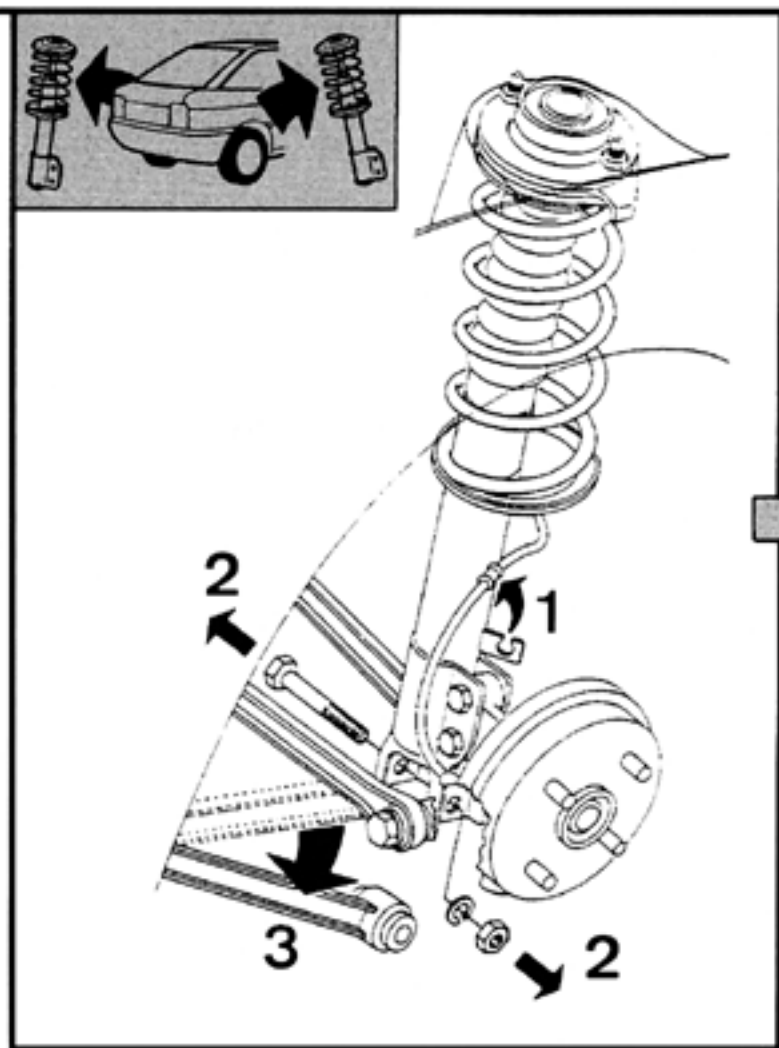

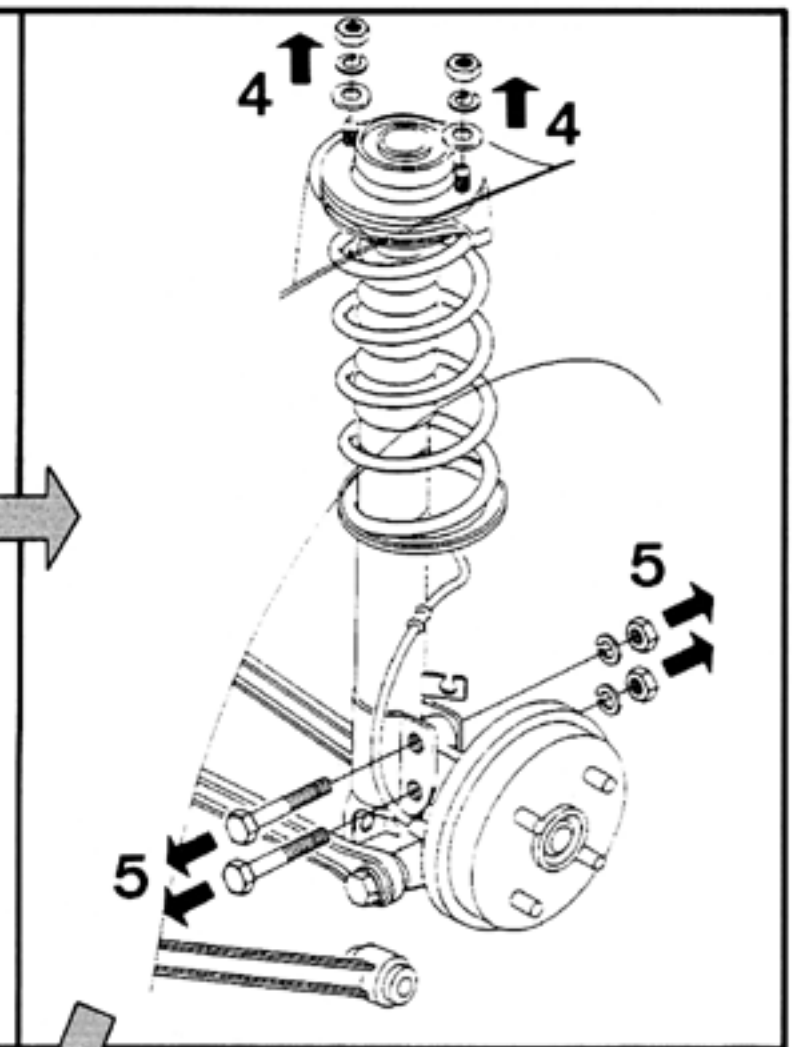

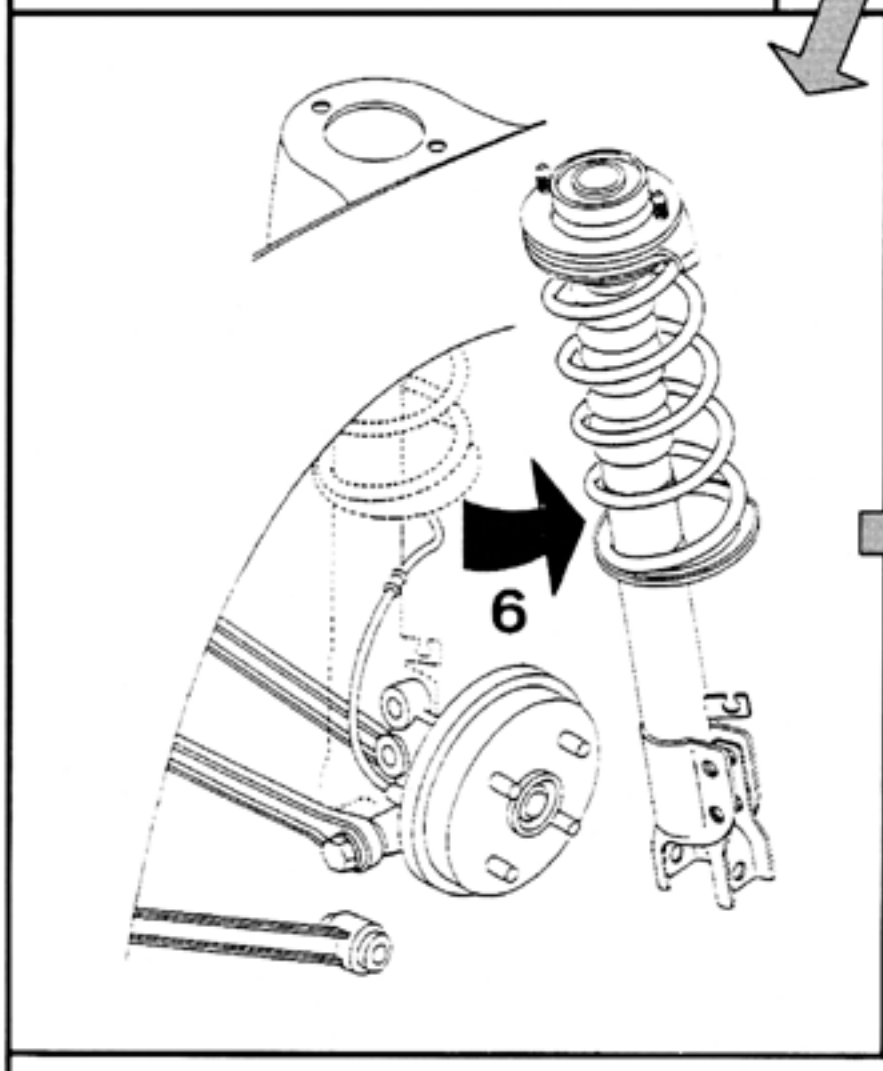

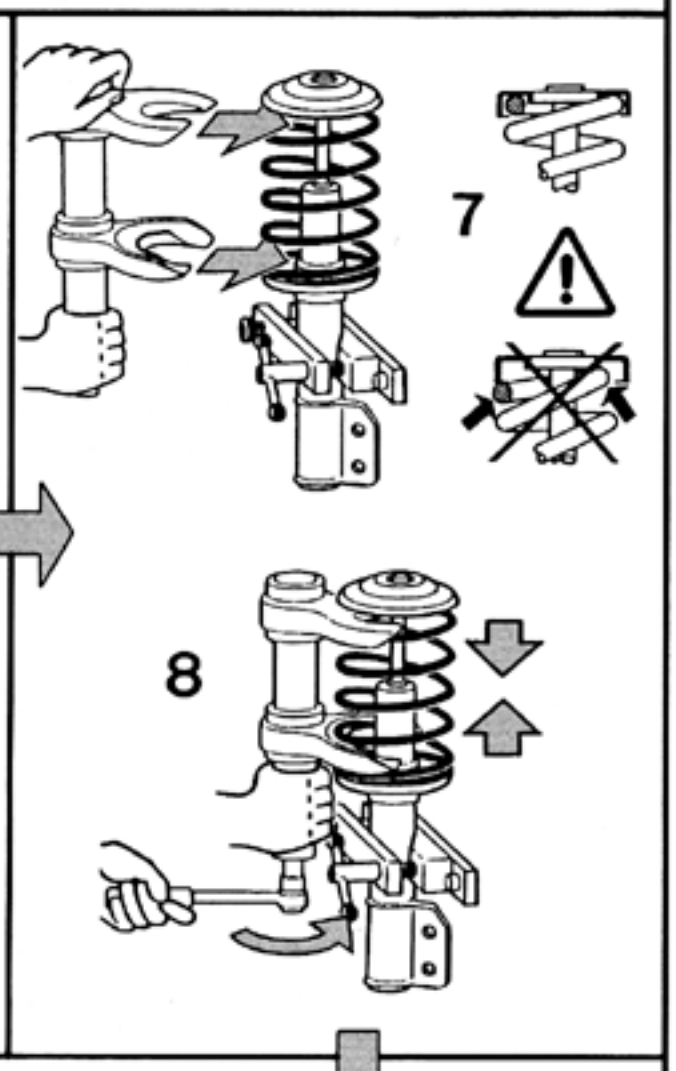

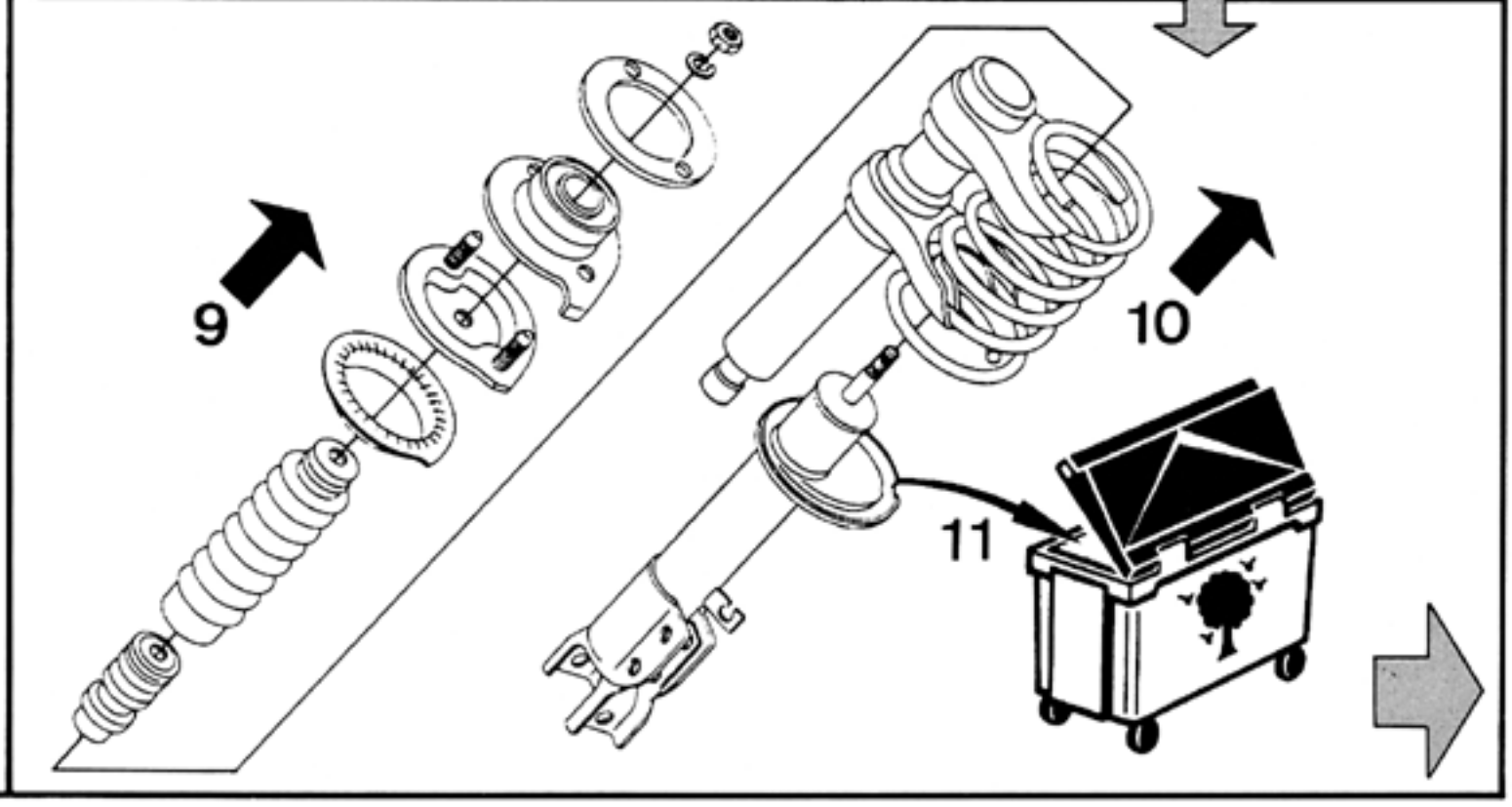

PRINTED IN BELGIUM 07/98