T 0012

MONROE

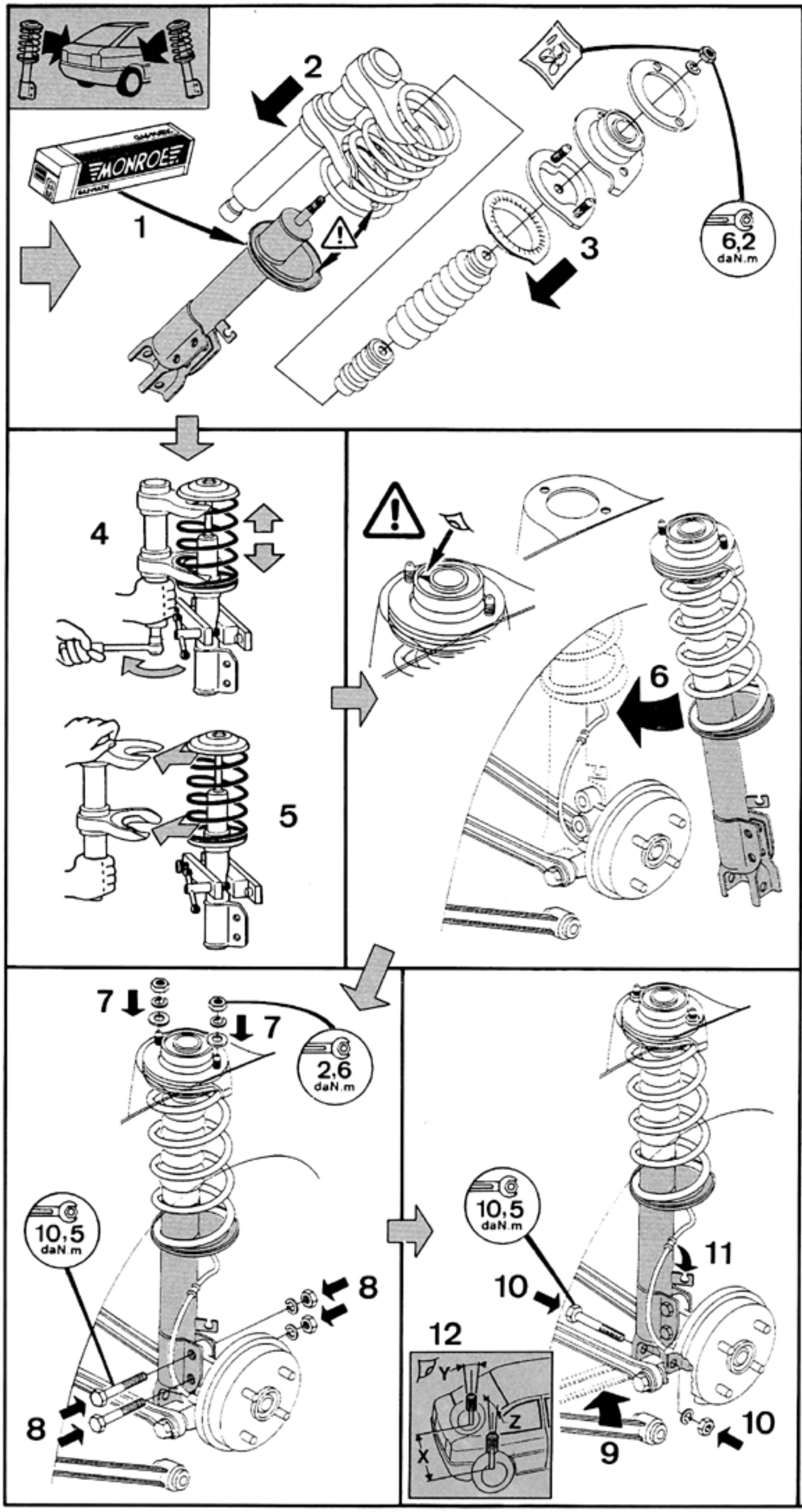

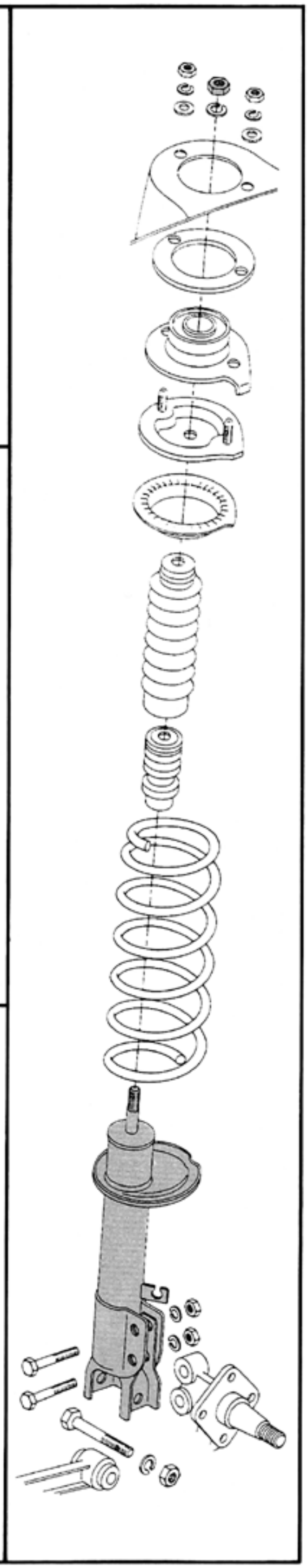

© Monroe all rights reserved