T 0040

MONROE

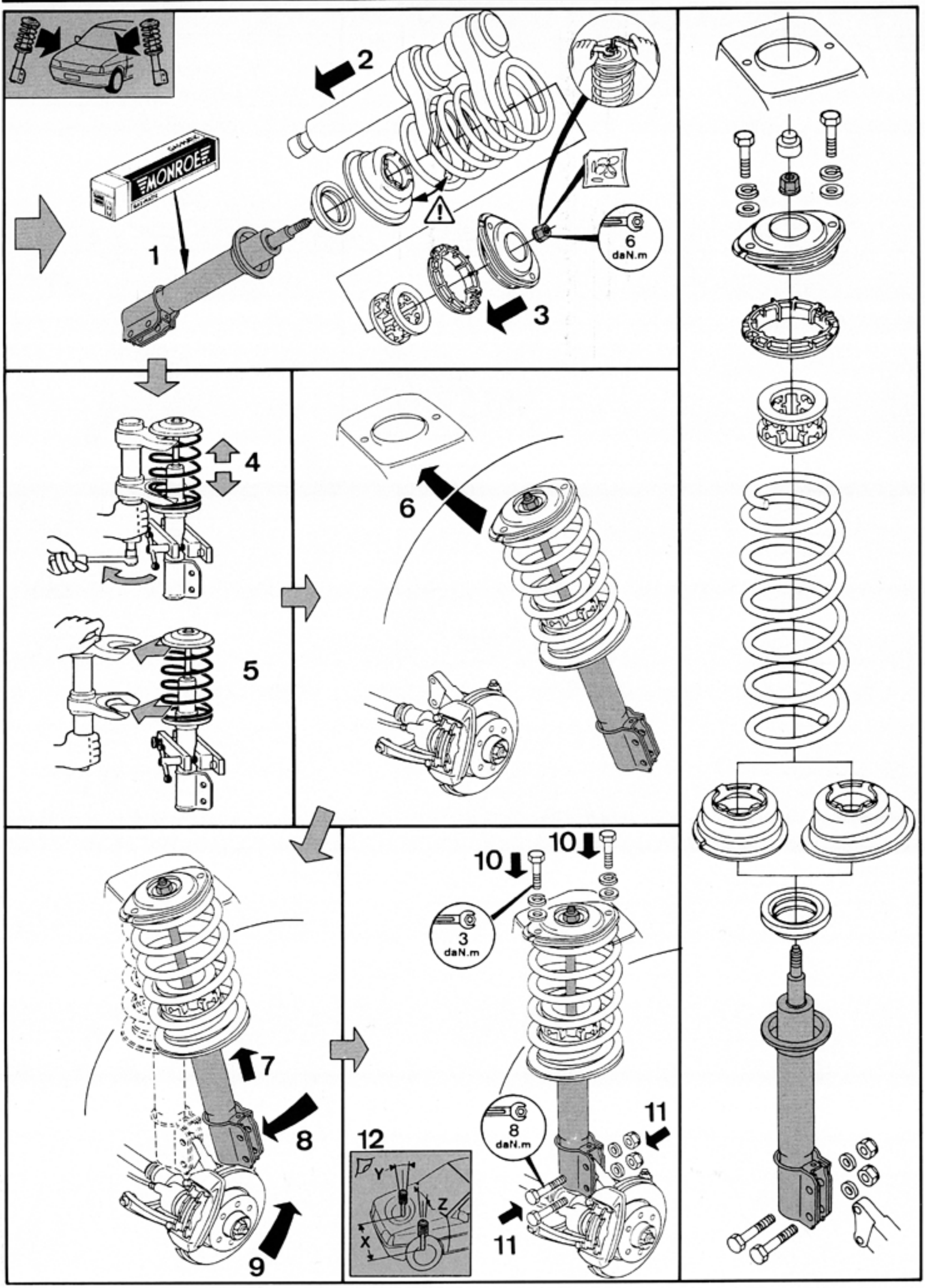

© Monroe all rights reserved