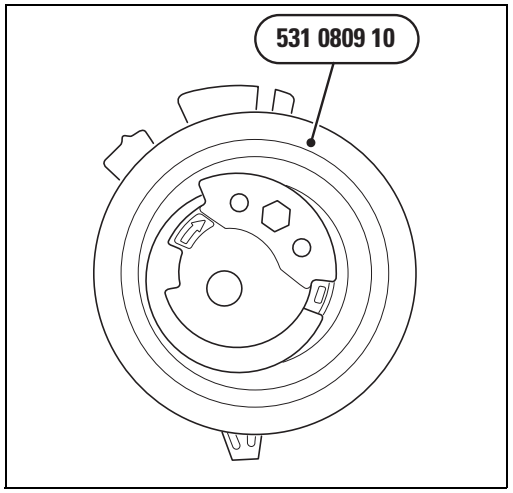

1

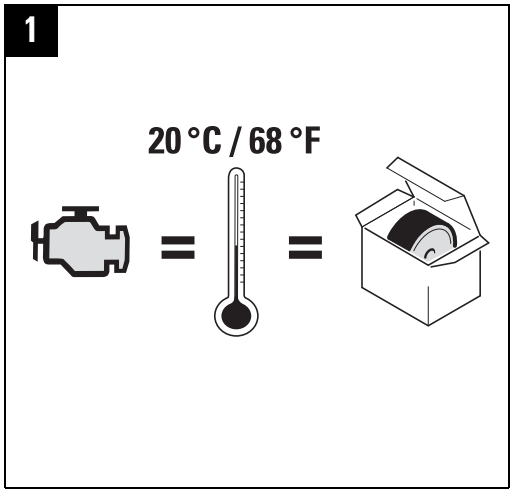

2

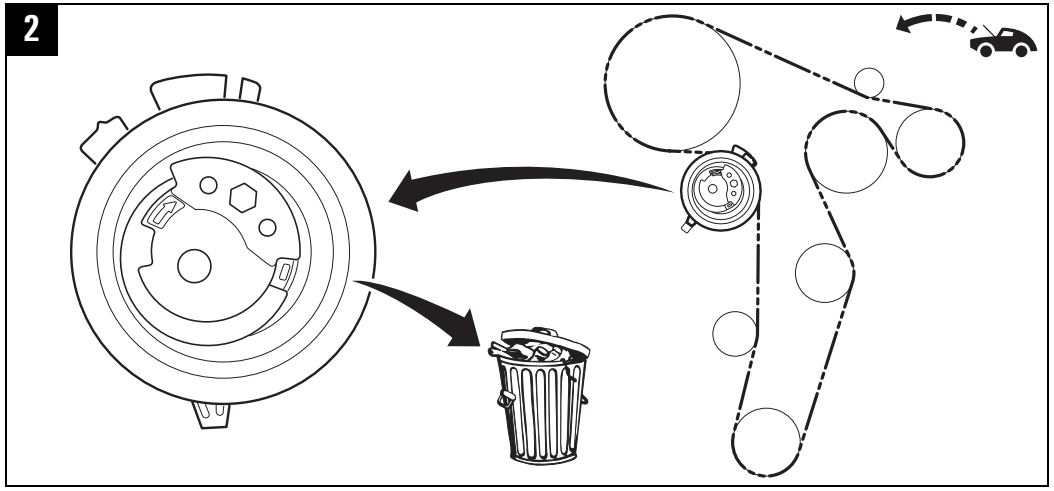

SERVICE

3

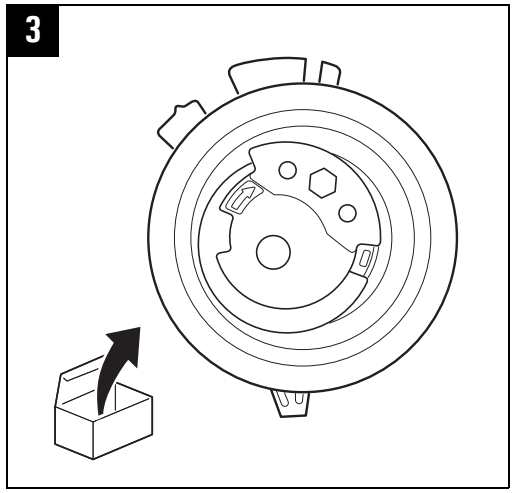

4

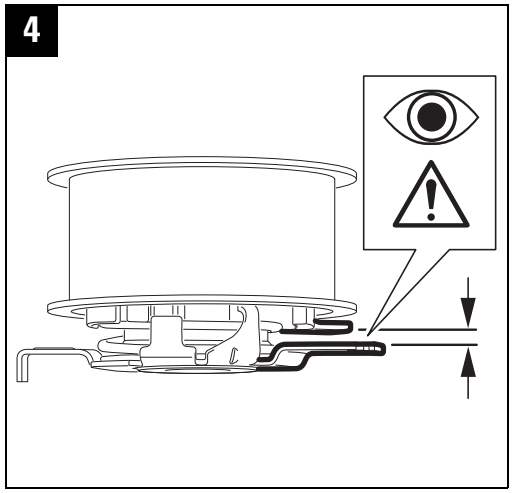

5

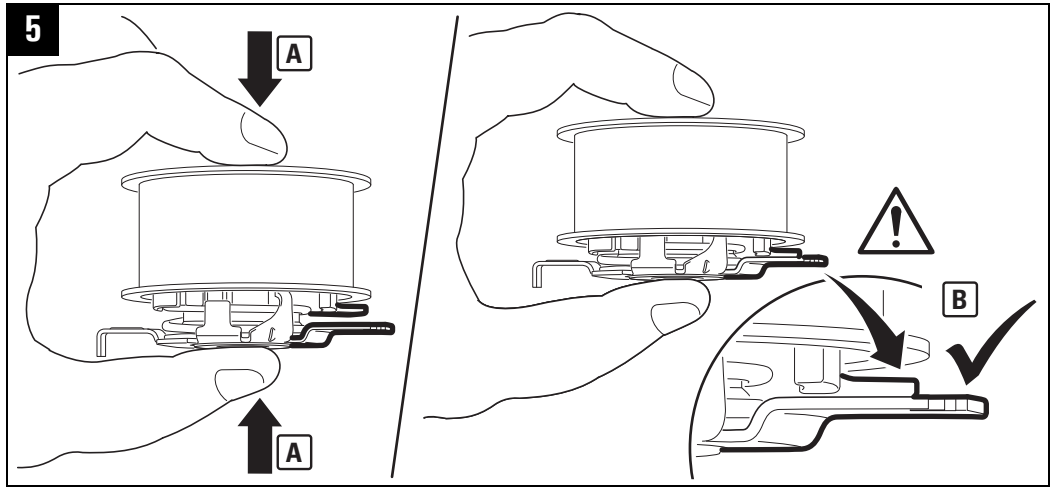

999 6006 020 © 2013 www.Schaeffler-Aftermarket.com

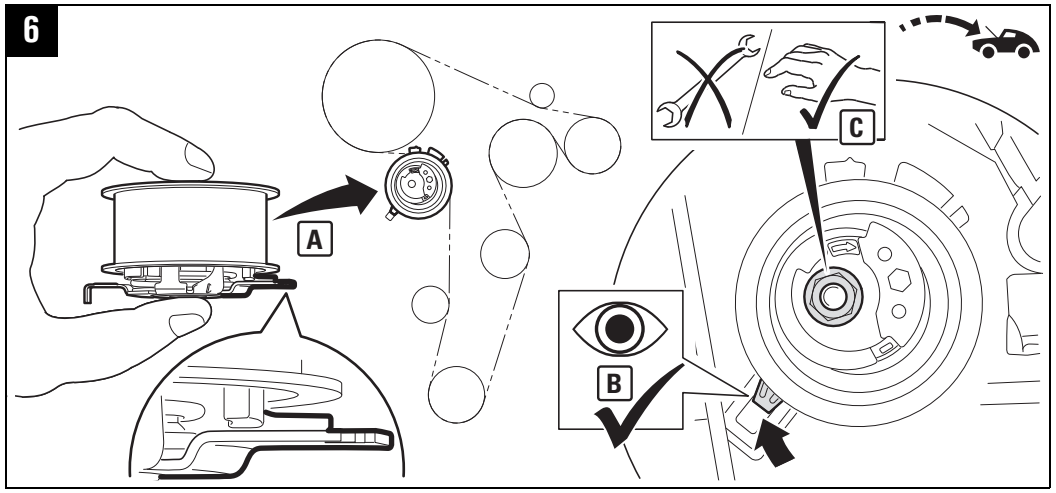

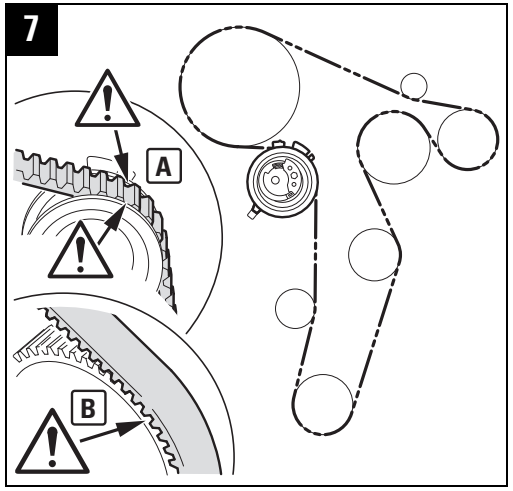

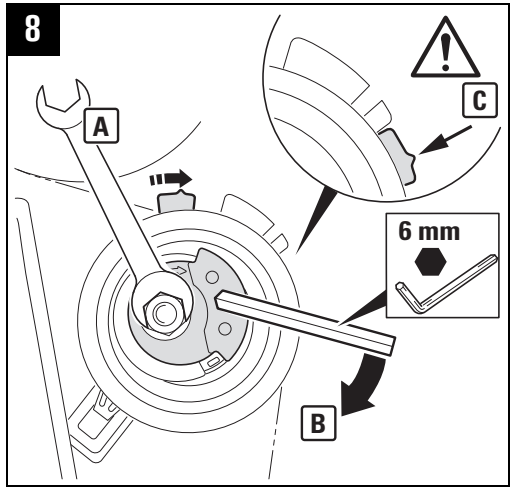
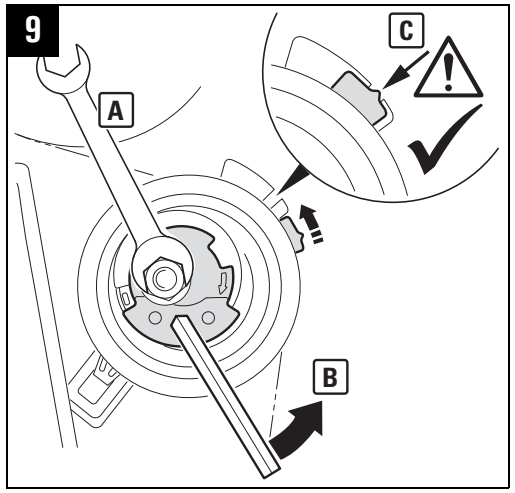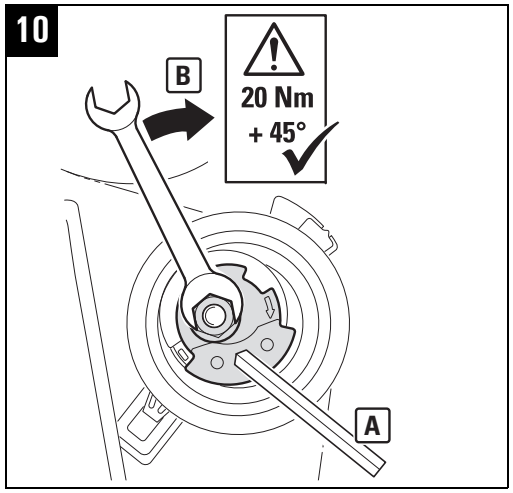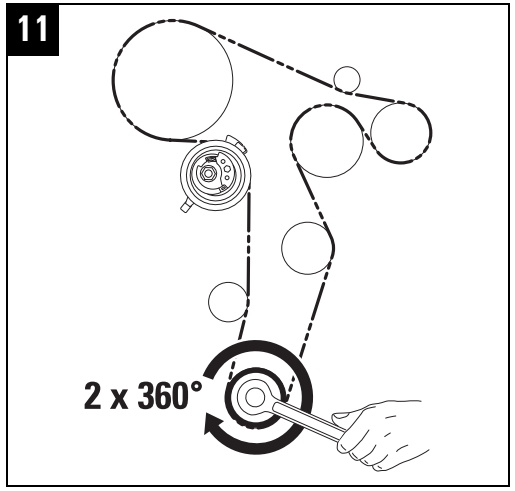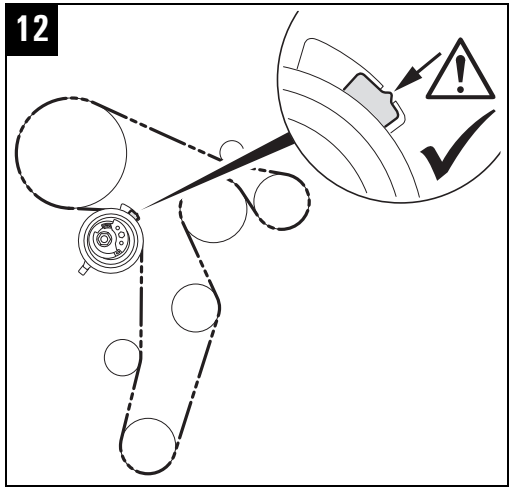
SERVICE