SERVICE

SERVICE

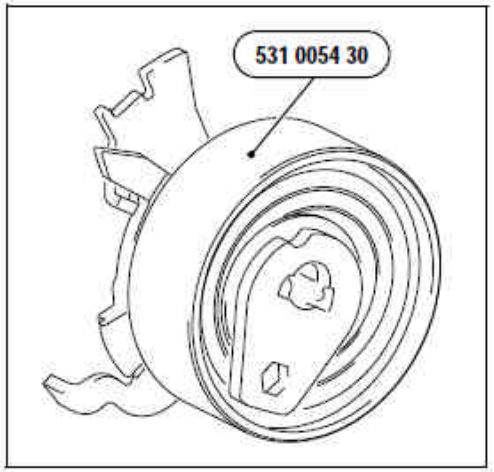

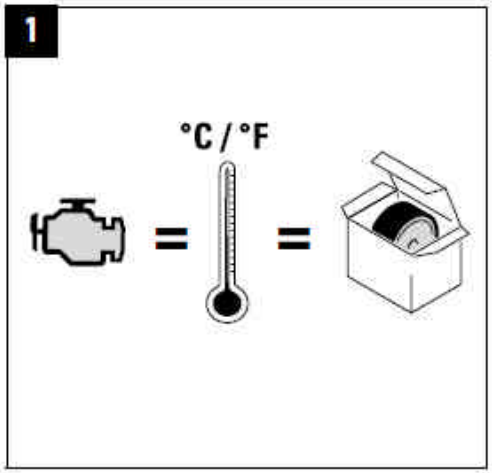

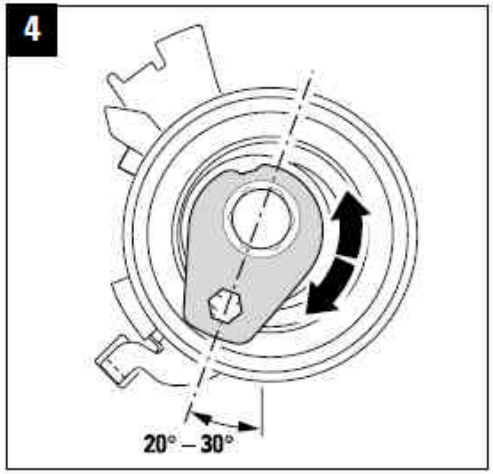

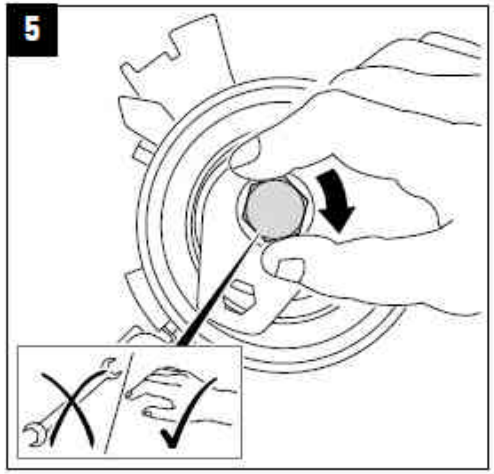

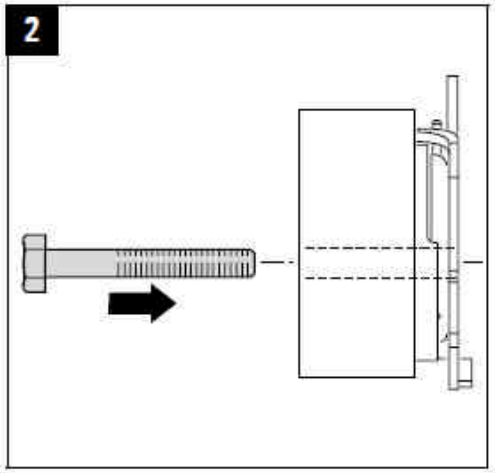

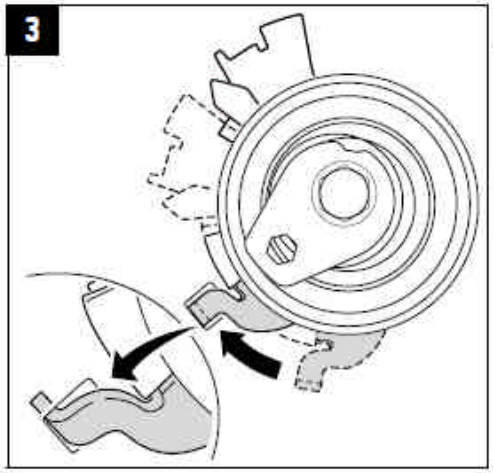

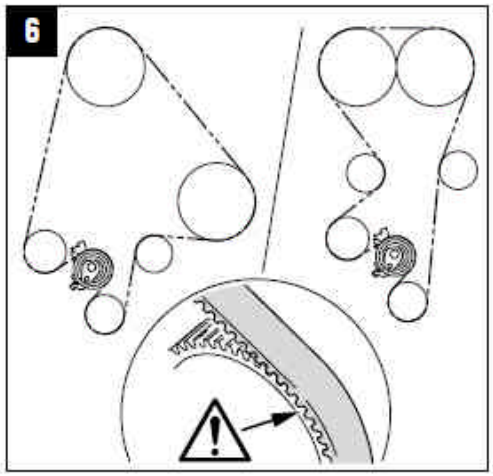

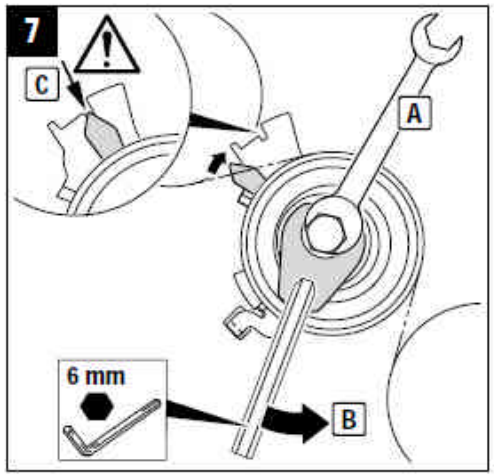

SERVICE

8

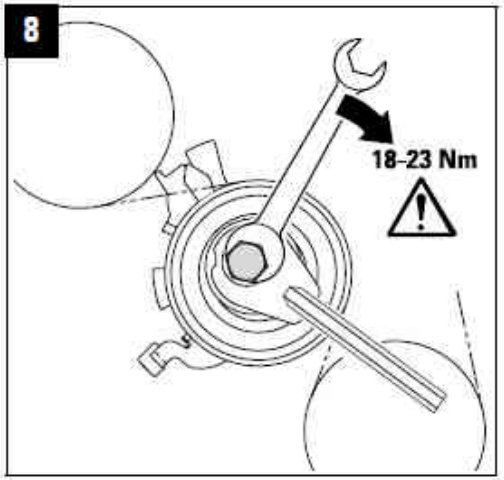

9

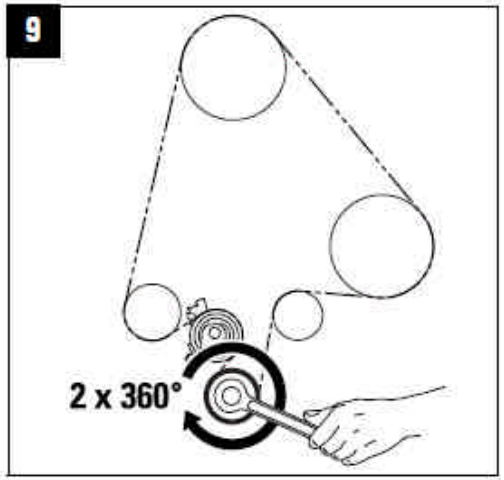
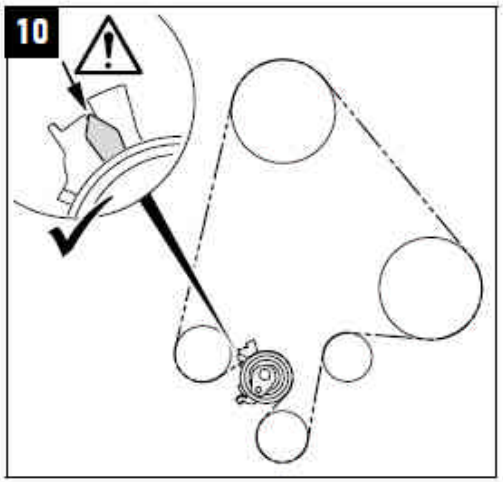
10