SERVICE LUK

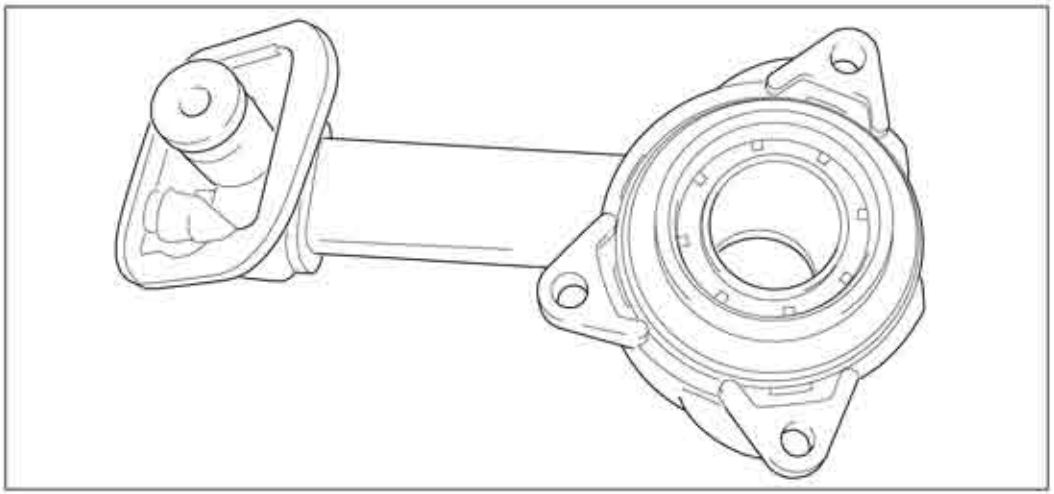

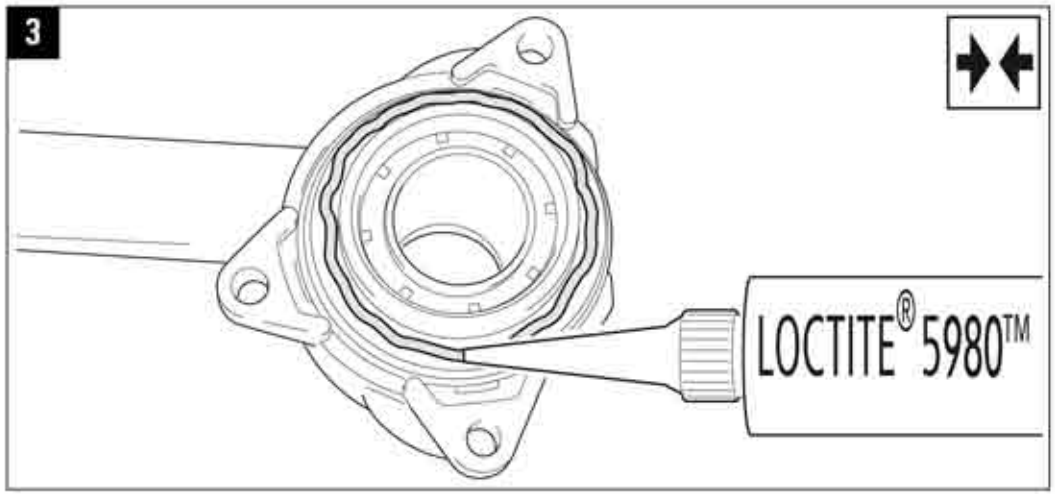

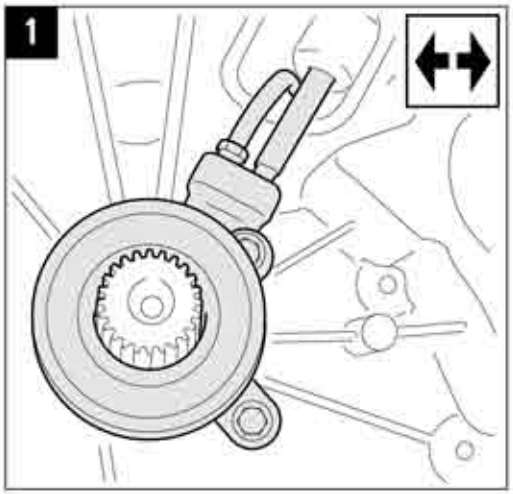

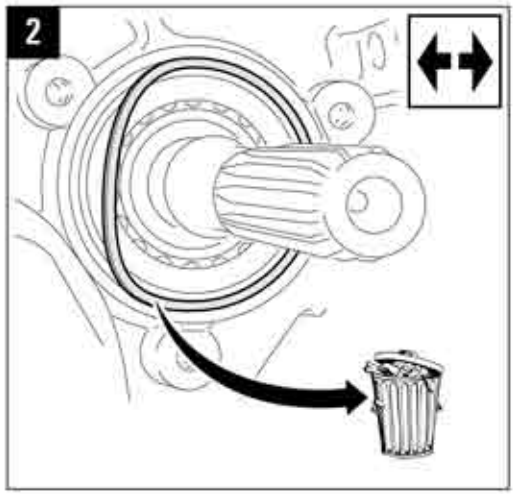

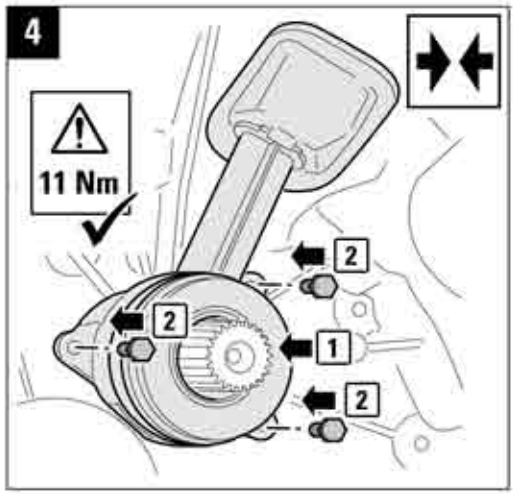

999 6005 950 © 2013 www.Schaeffler-Aftermarket.com