SERVICE

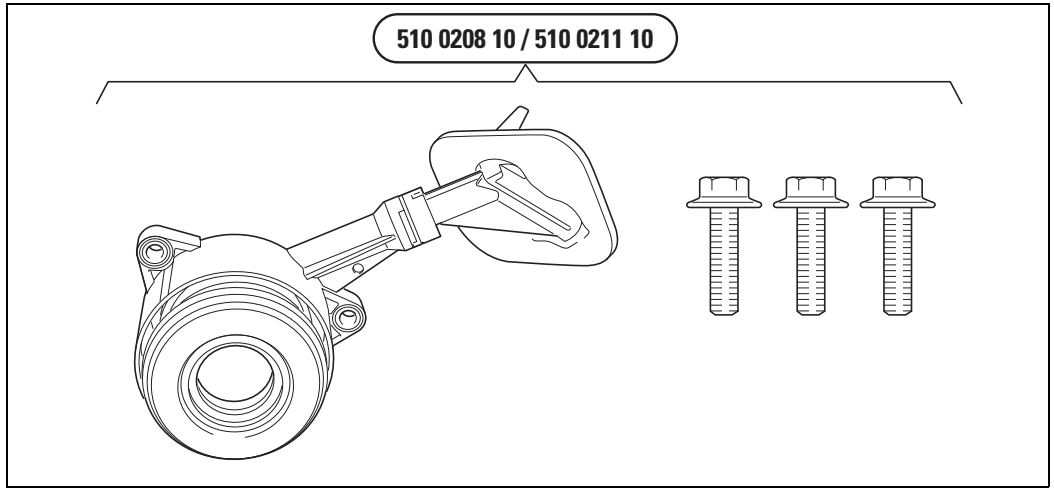

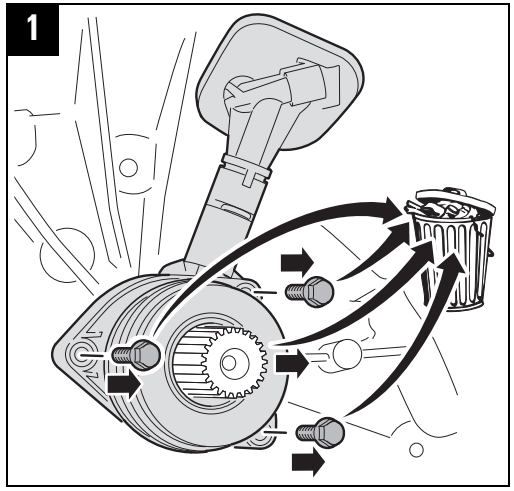

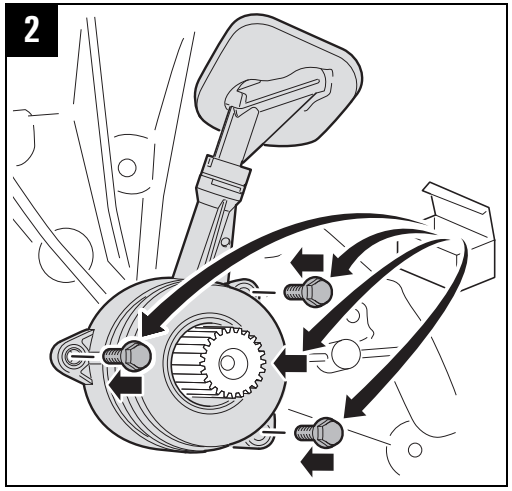

999 6005 940 © 2013 www.Schaeffler-Aftermarket.com