SERVICE

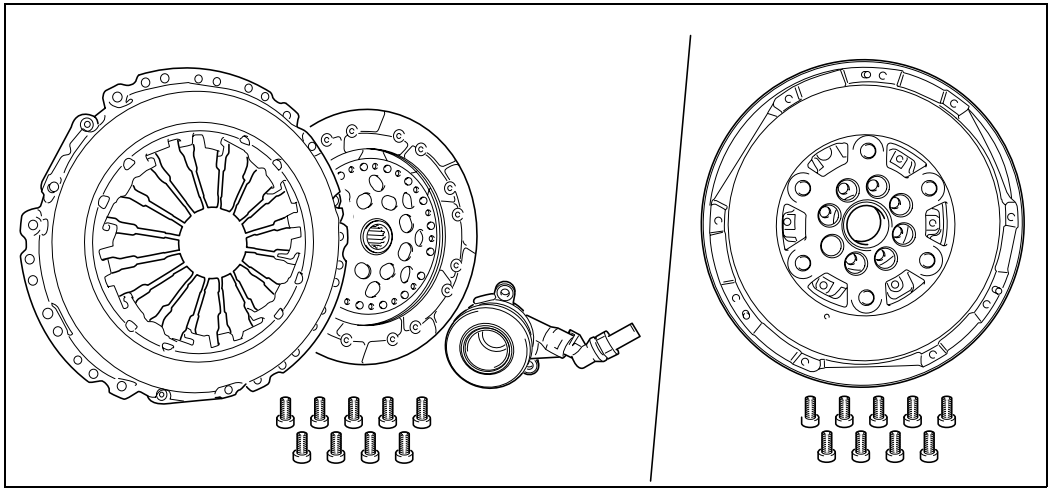

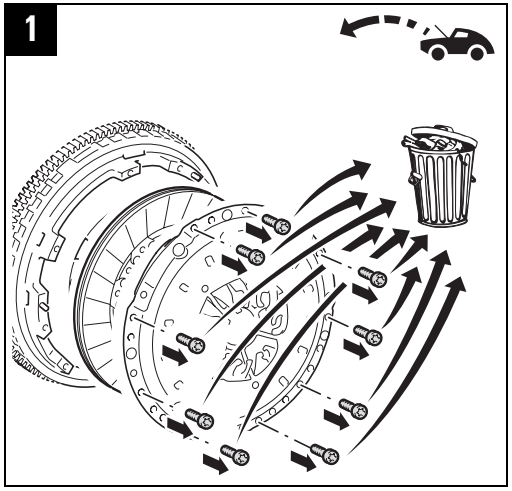

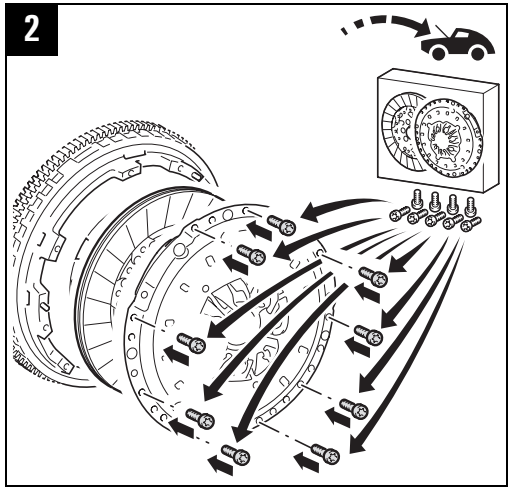

999 6005 360 © 2011 www.Schaeffler-Aftermarket.com