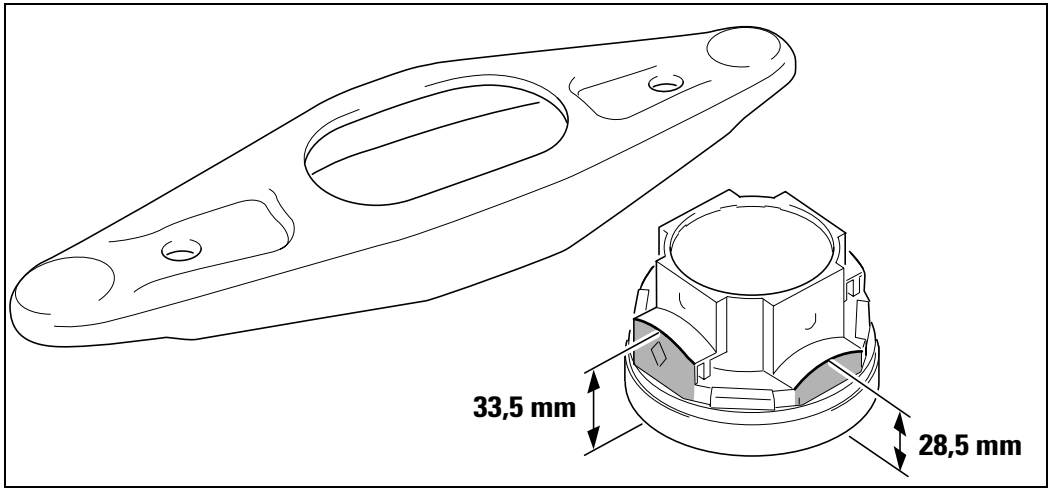

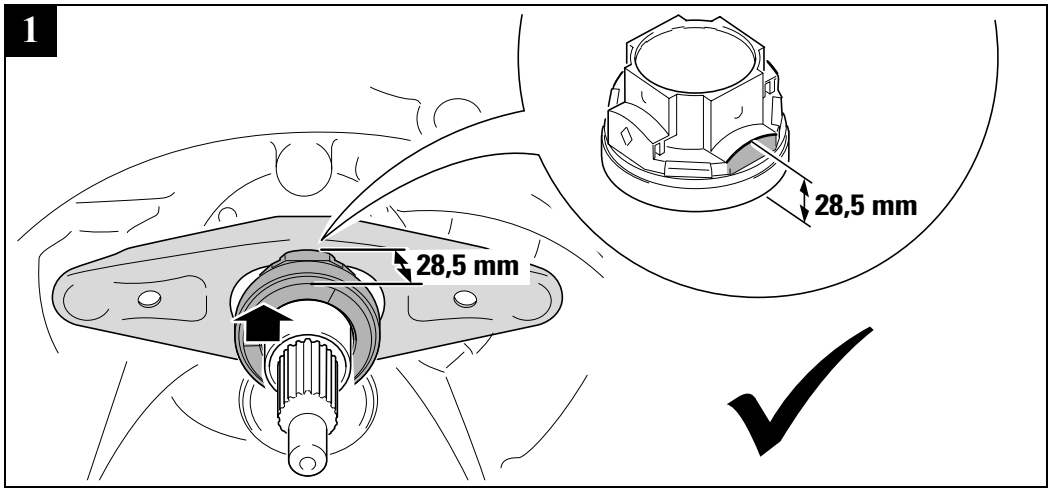

999 6005 000 © 2009 Schaeffler Automotive Aftermarket oHG