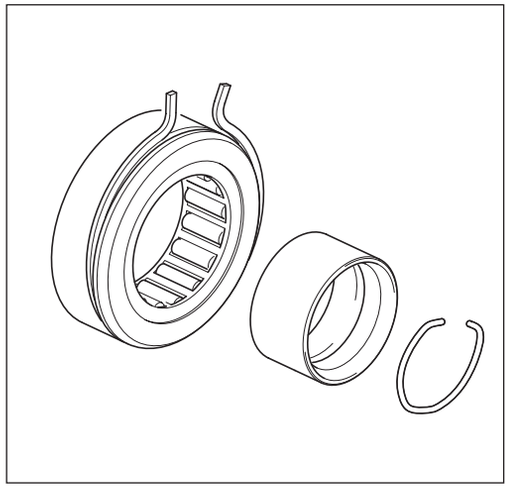

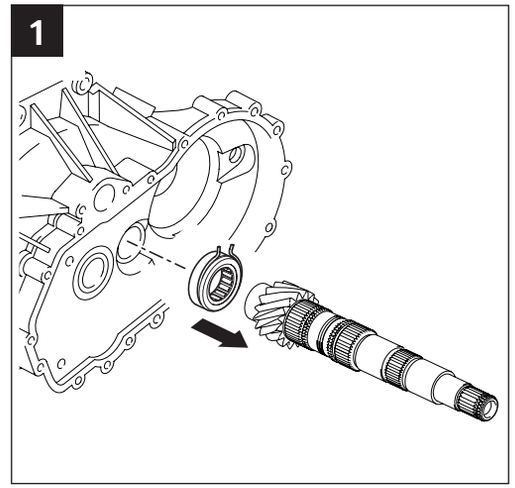

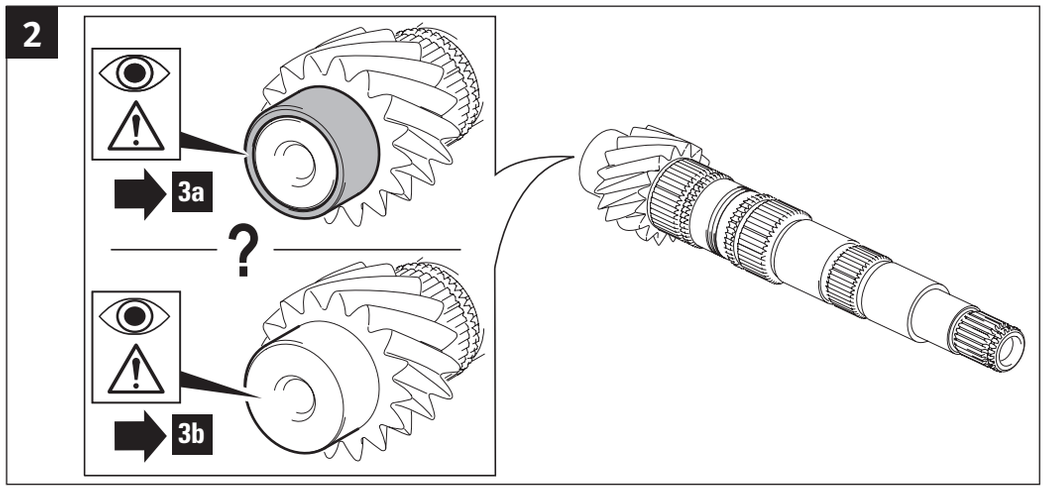

I278-GB ©2021 Schaeffler Automotive Aftermarket
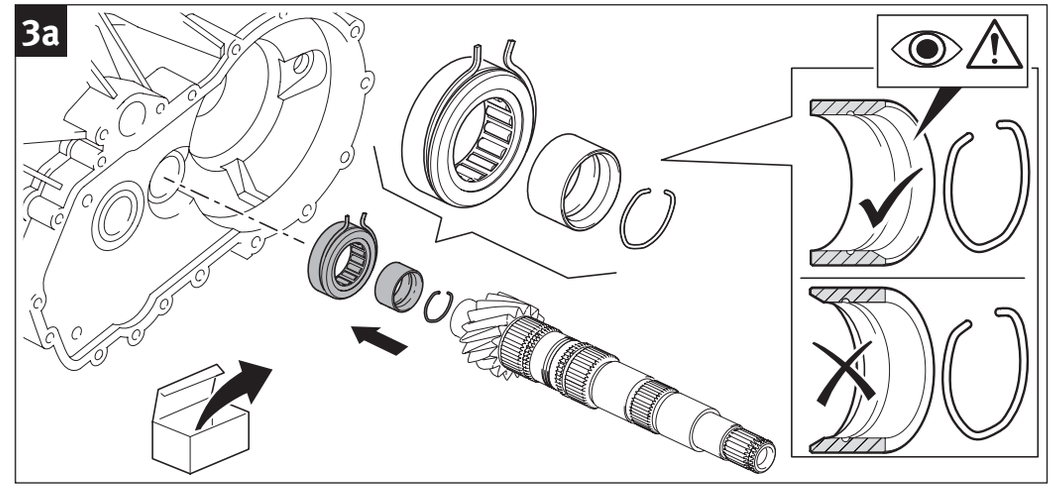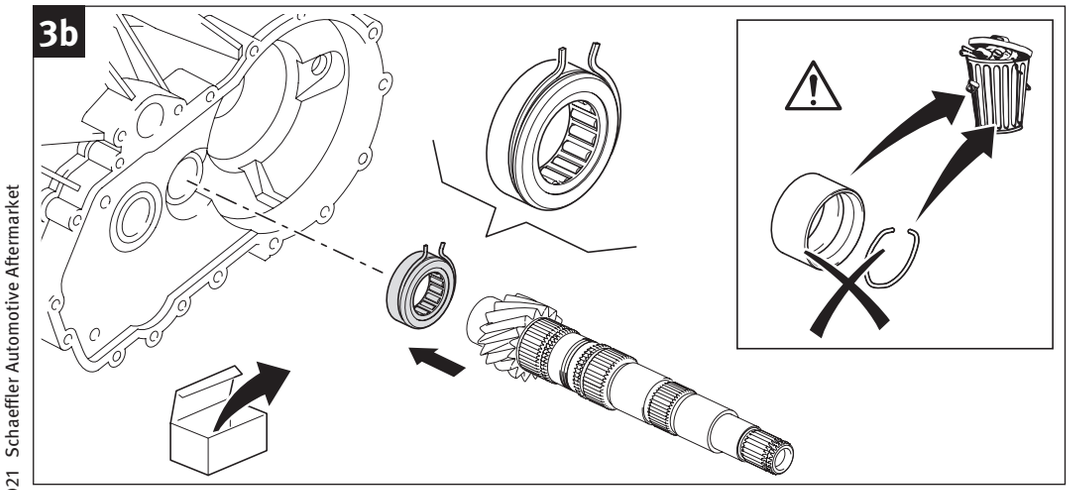
SCHAEFFLER
REP›XPERT