T 0238

MONROE

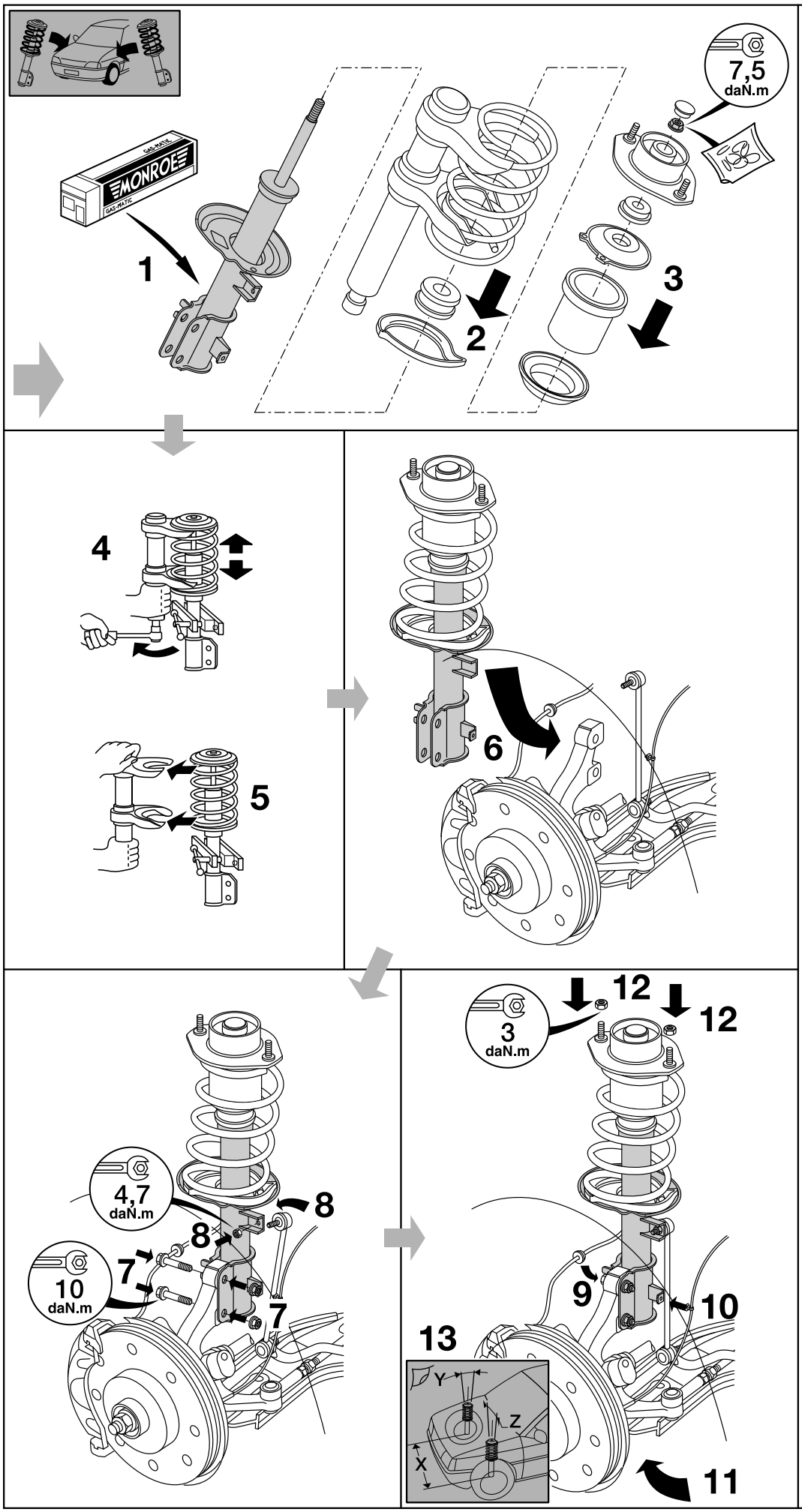

© Monroe all rights reserved.