MONROE®

T 0208

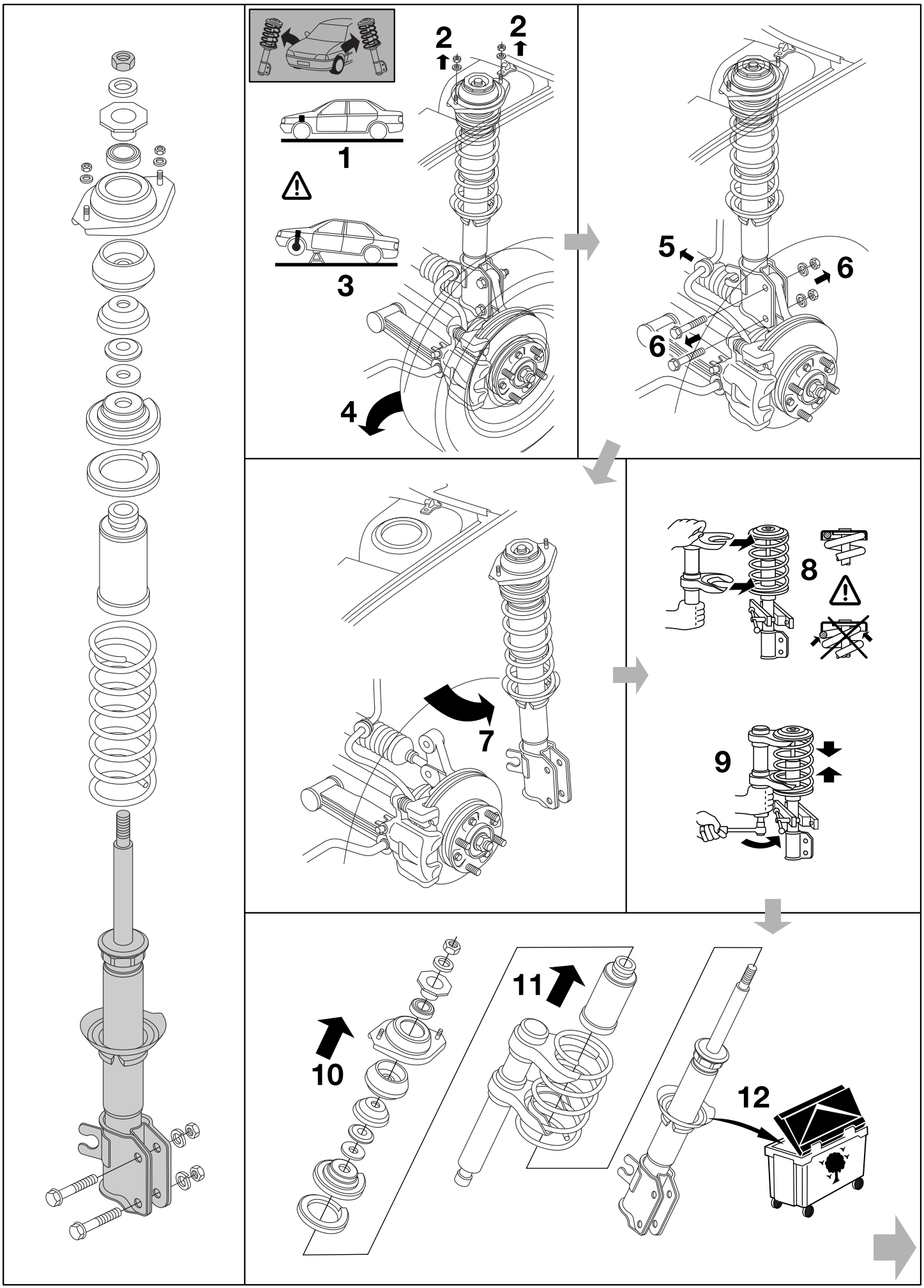

E.T.A.I 03/02

© Monroe all rights reserved.