# T 0142

MONROE

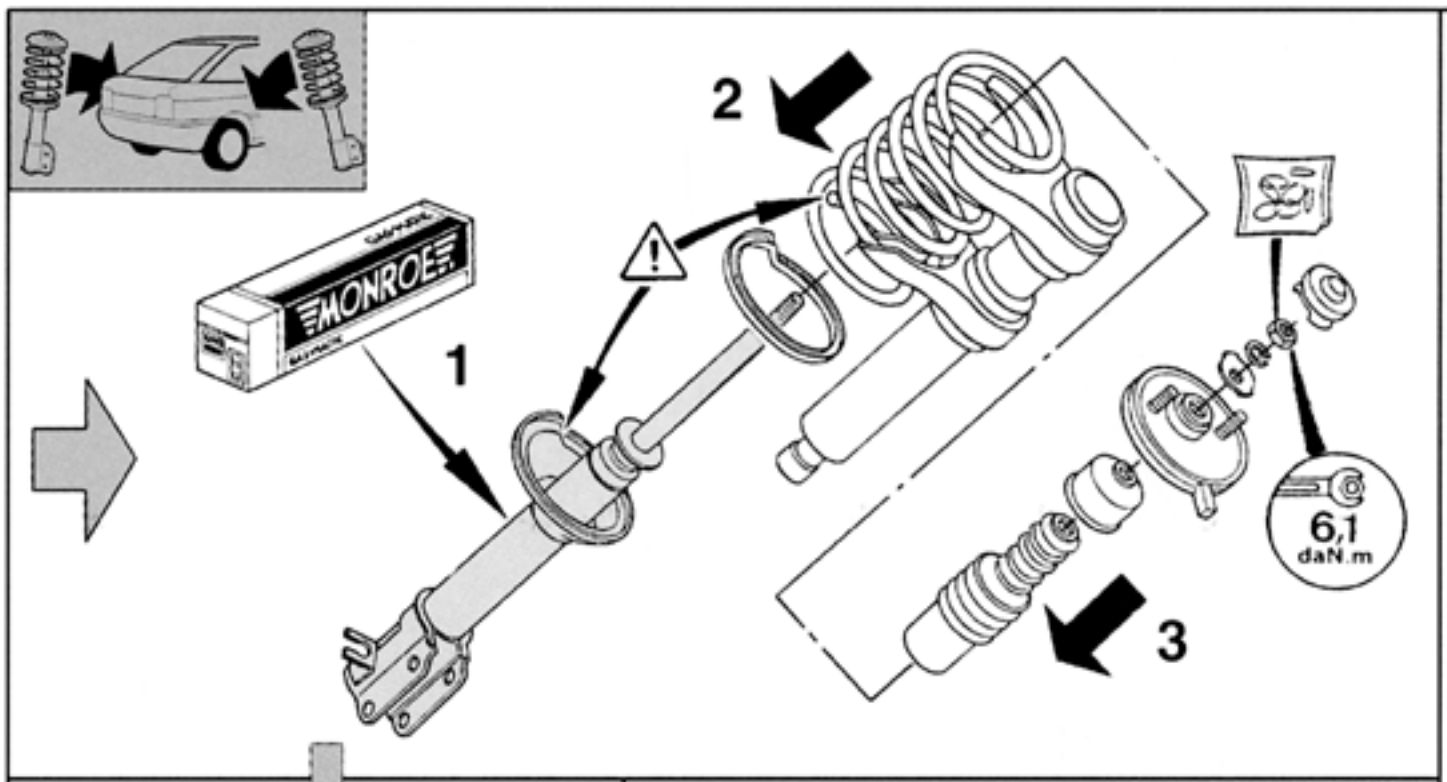


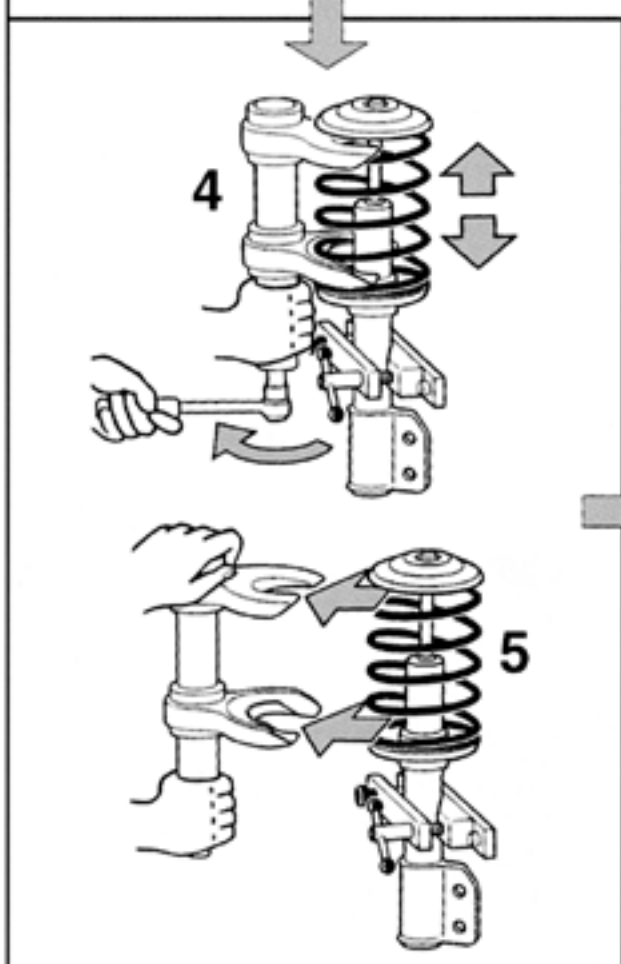


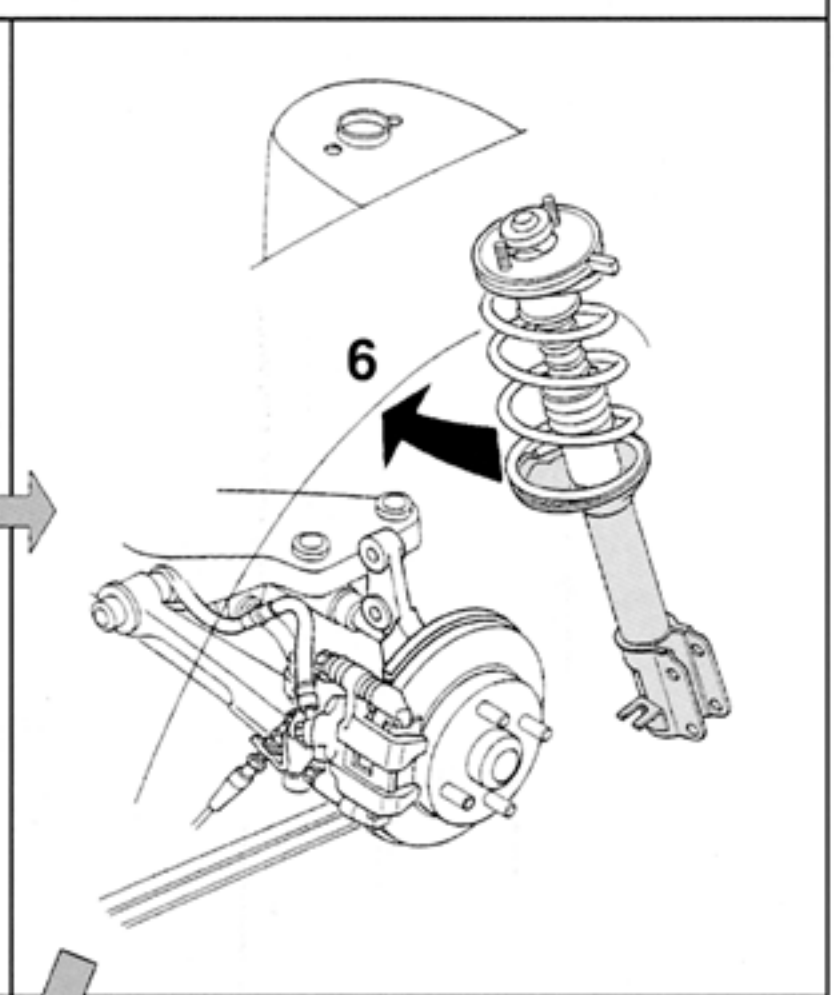


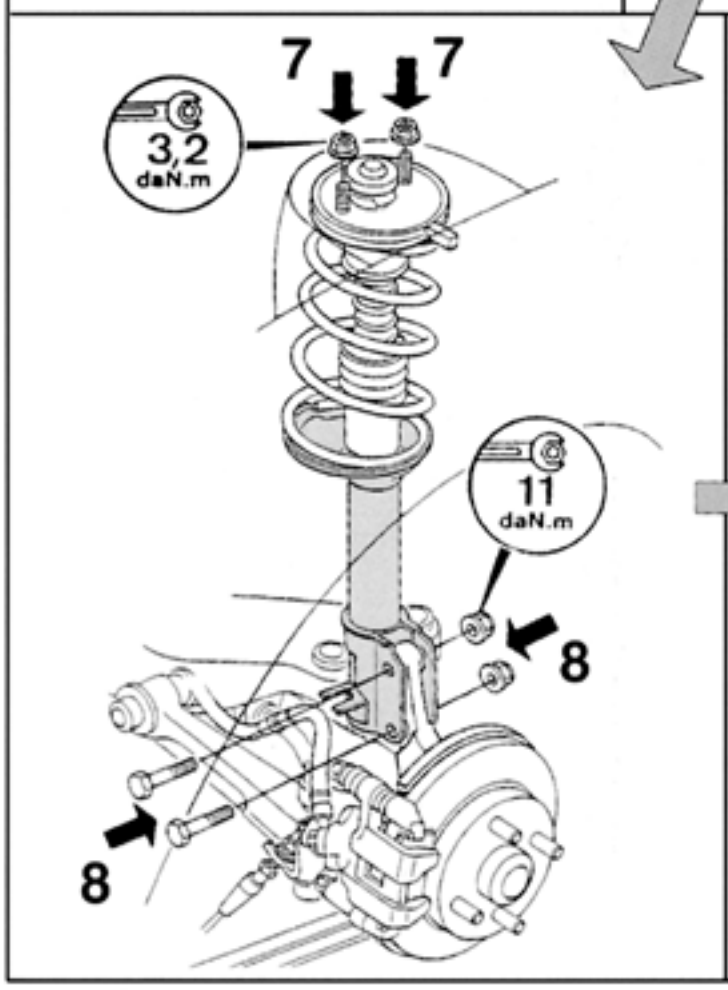


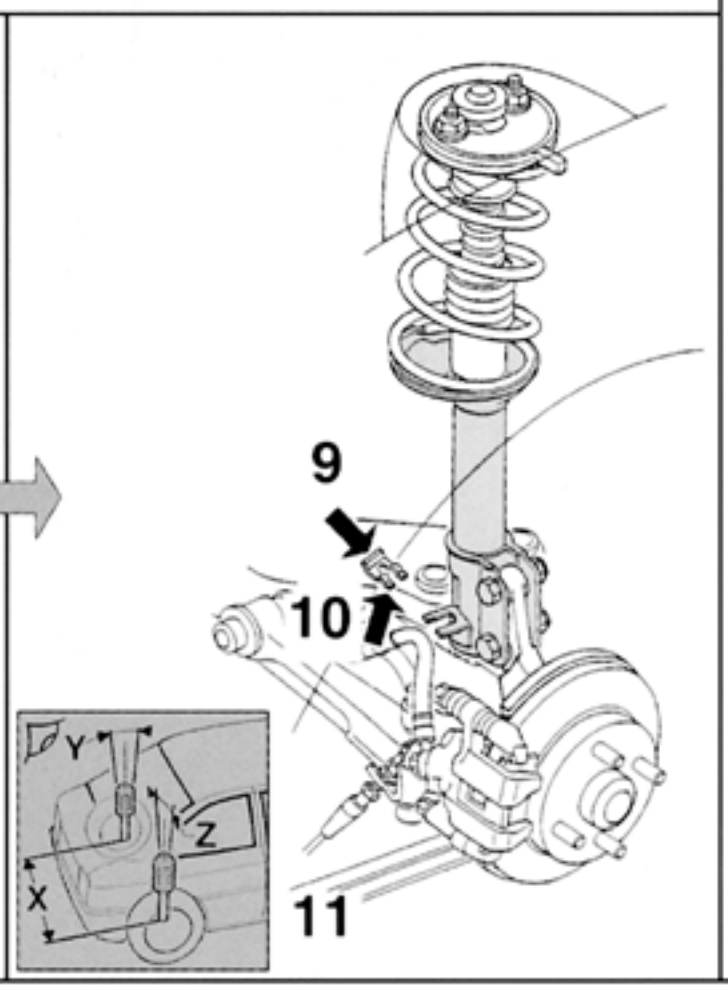


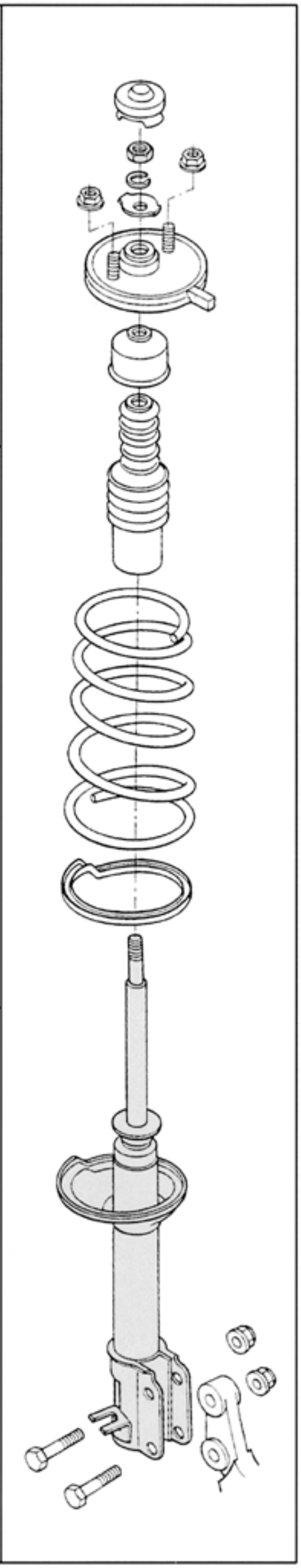

© Monroe all rights reserved.