MONROE

# T 0232

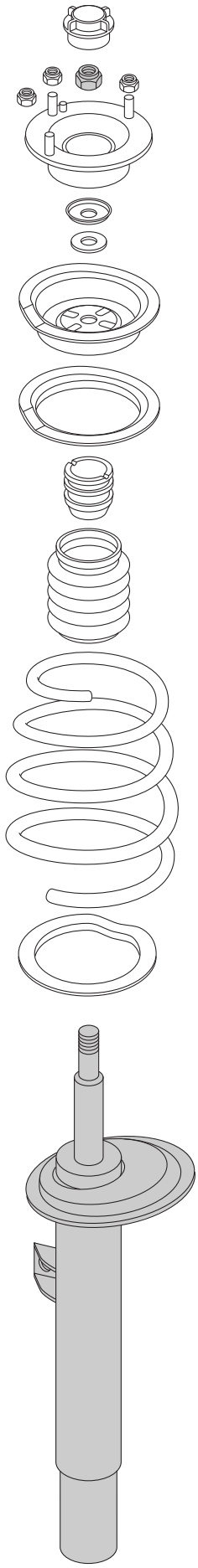

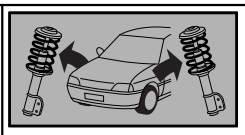

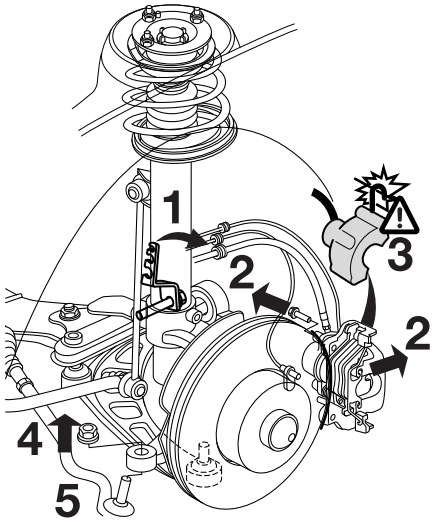


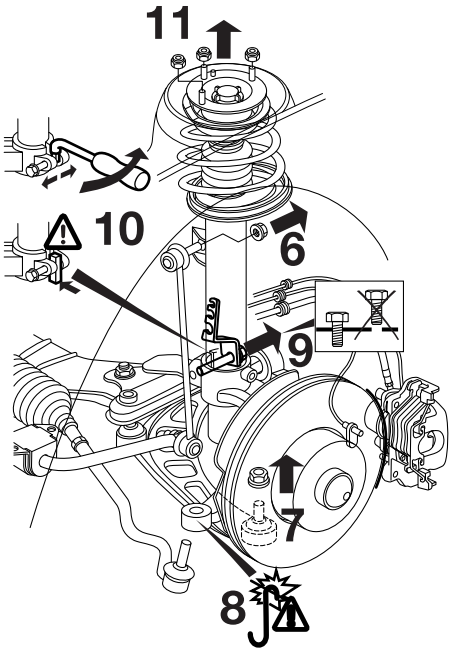


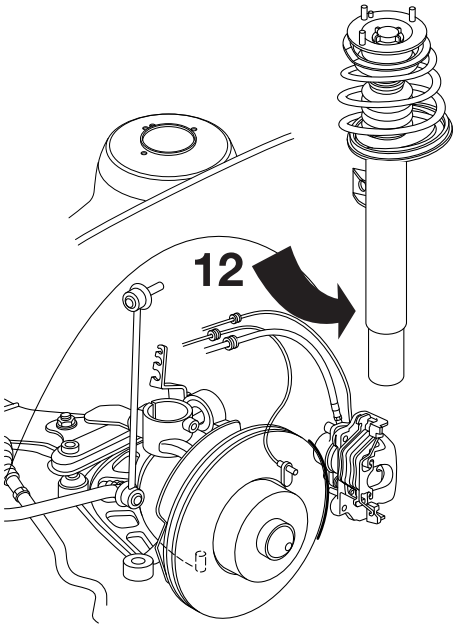


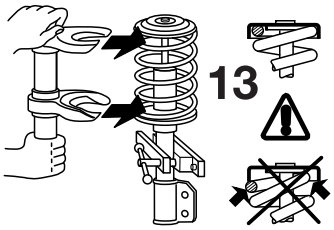


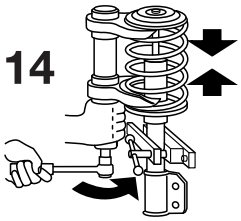


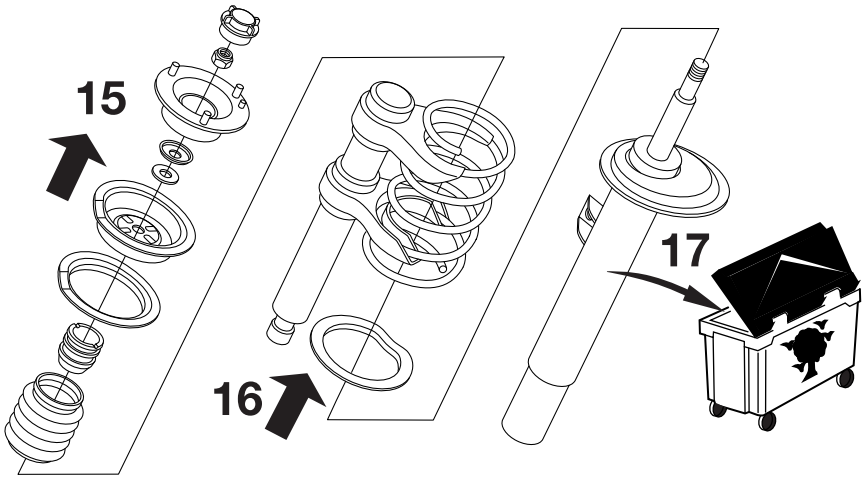


E.T.A.I 03/03

© Monroe all rights reserved.