T 0099

MONROE

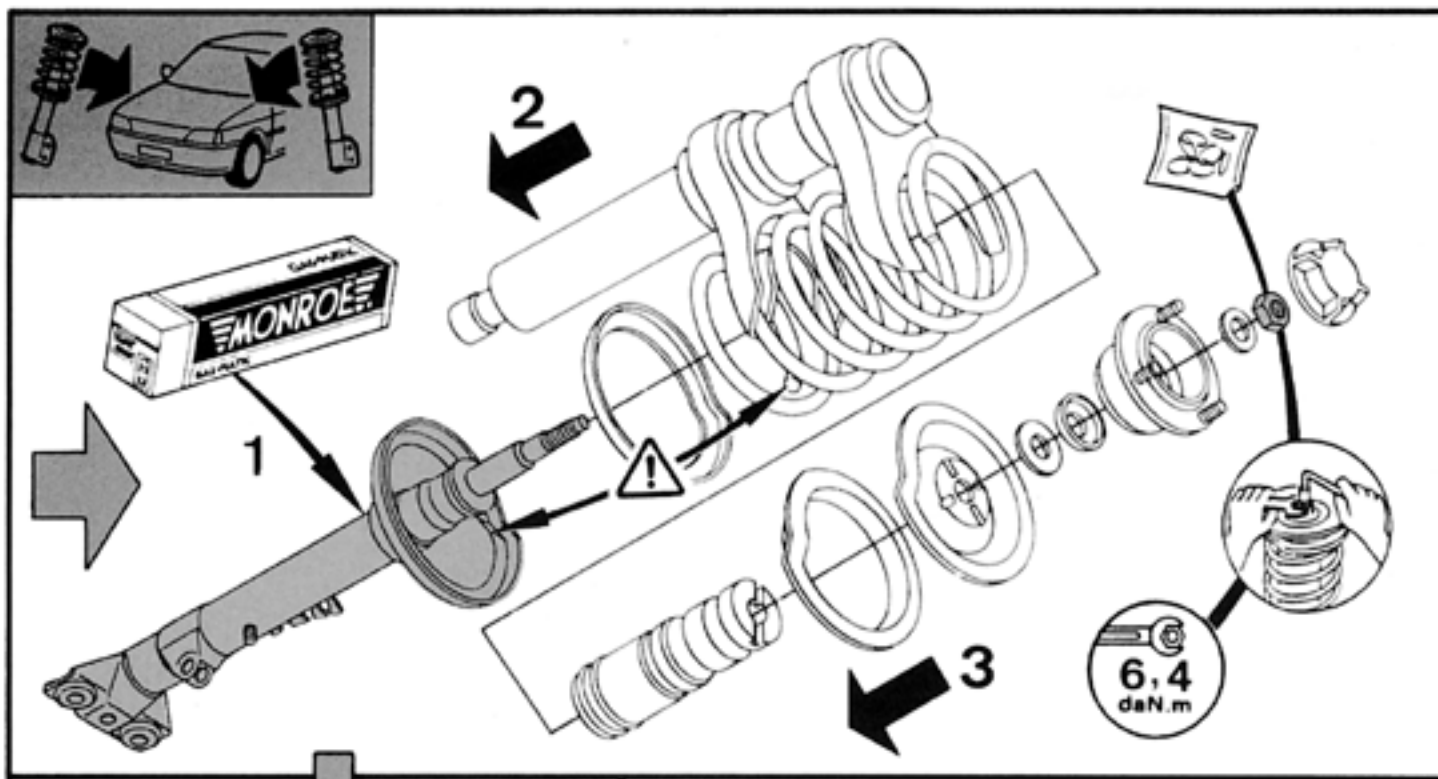

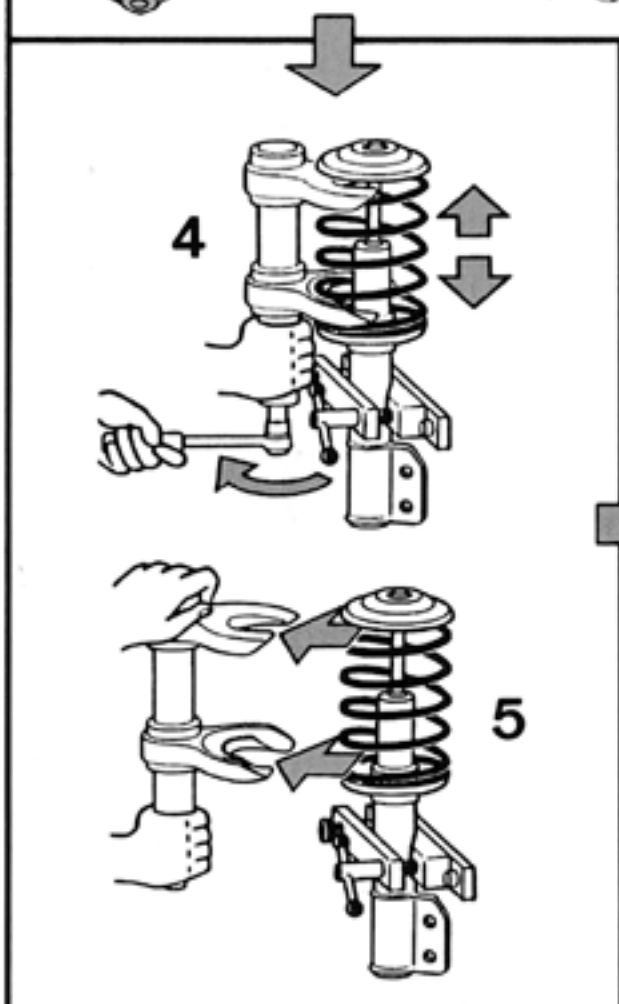

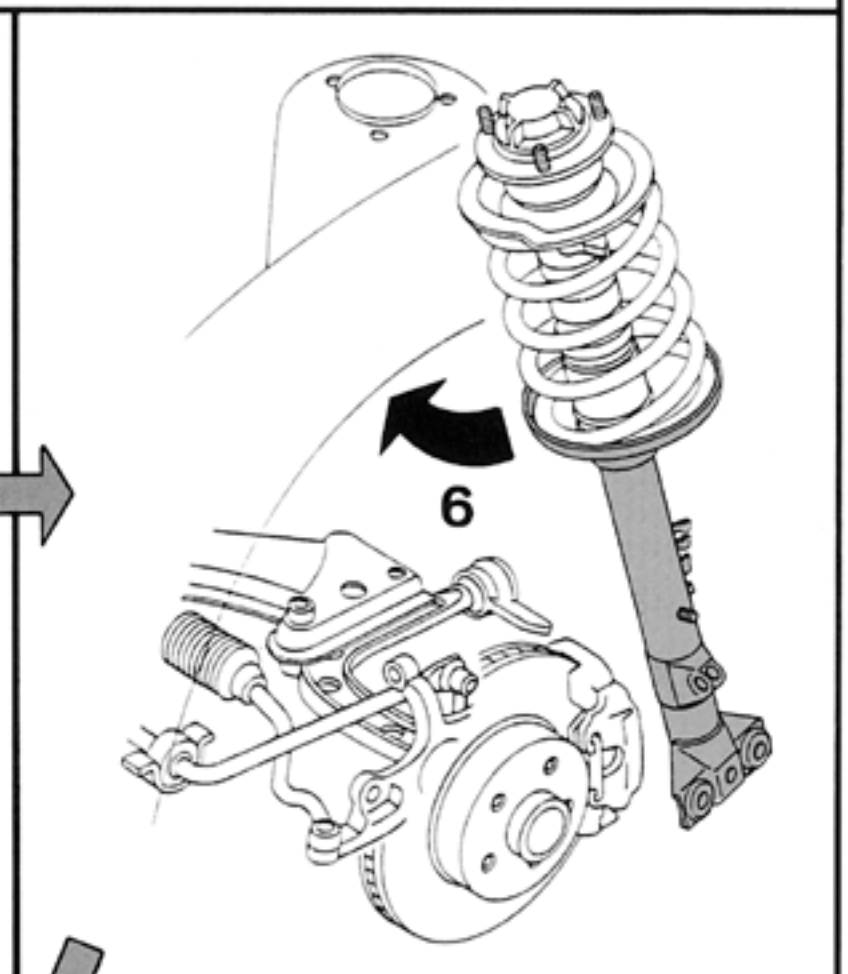

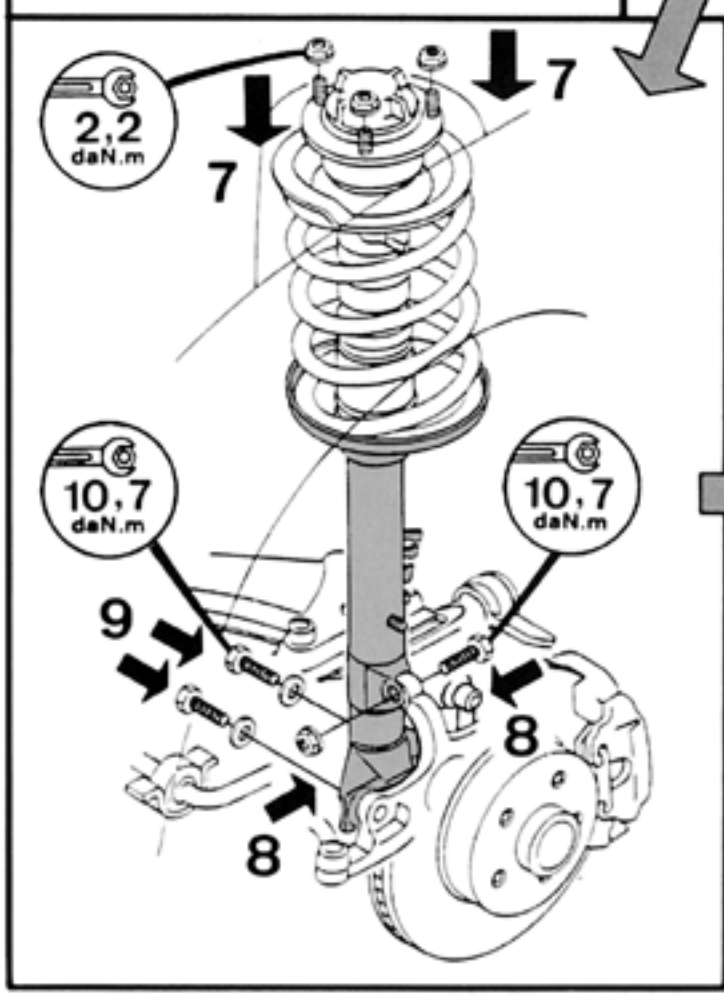

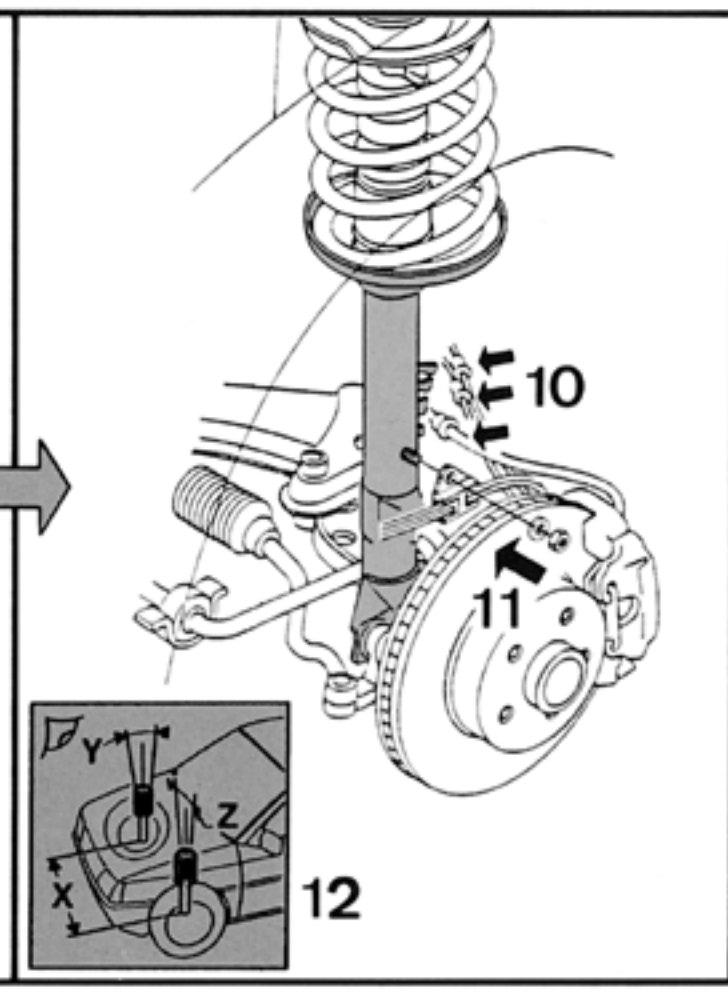

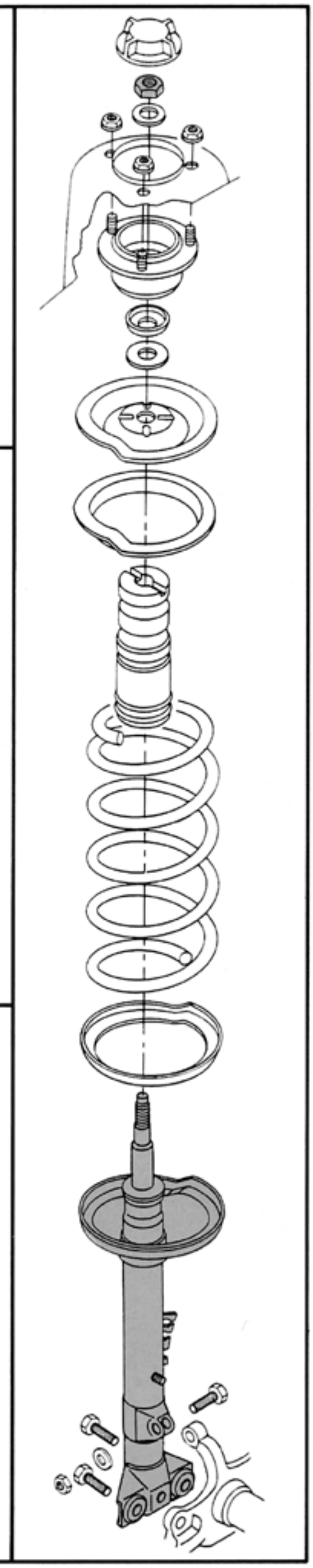

© Monroe all rights reserved