T 0106

MONROE

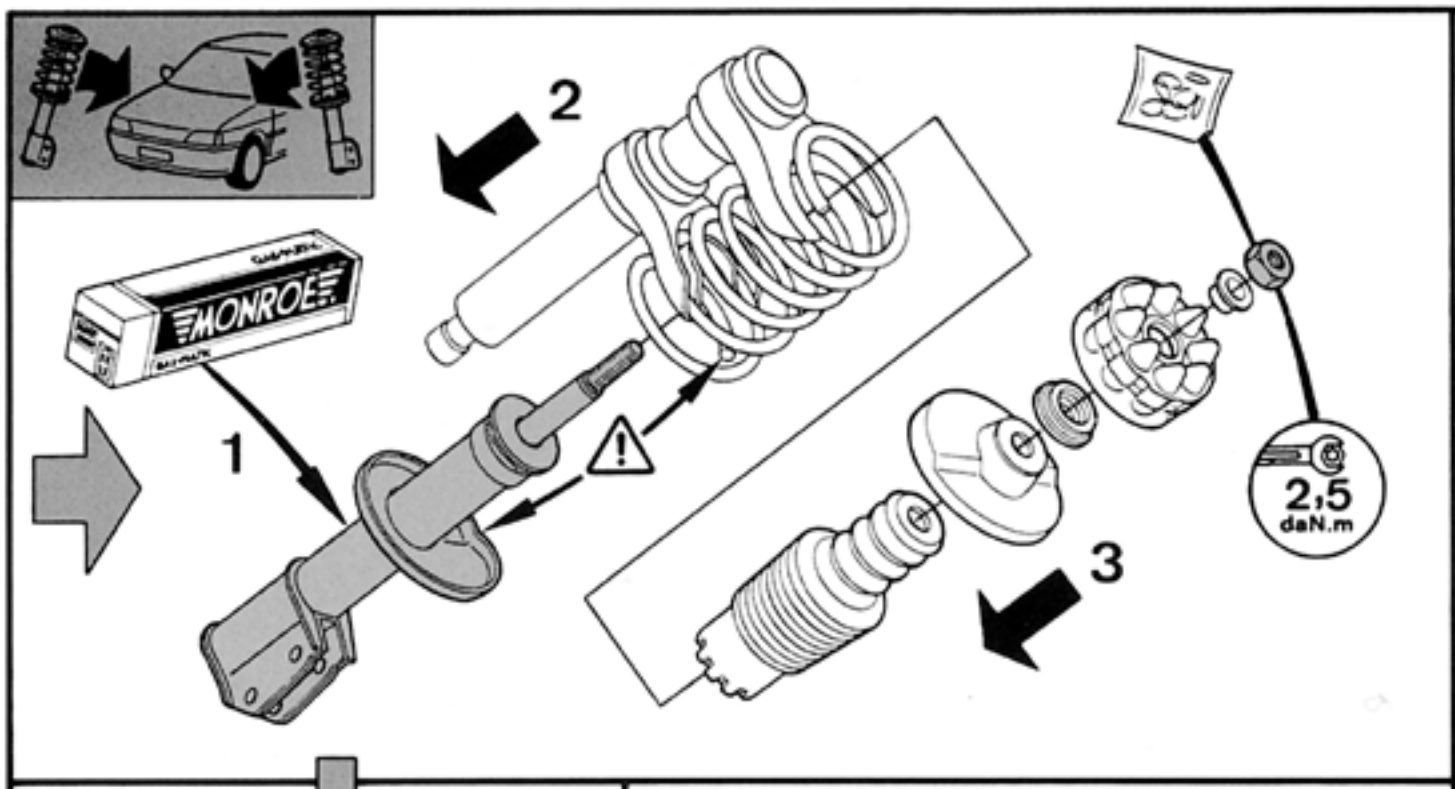

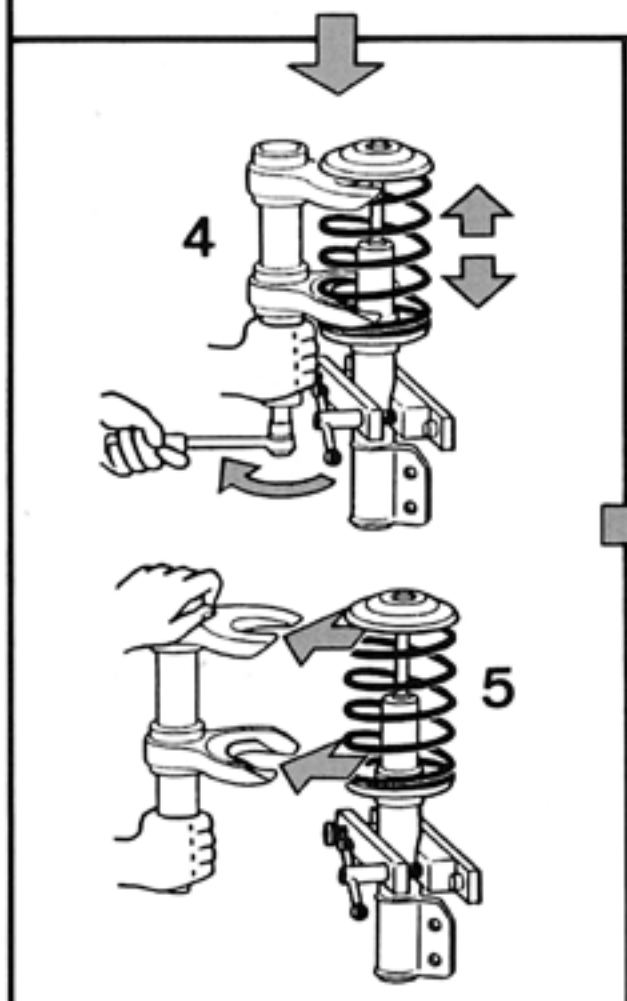

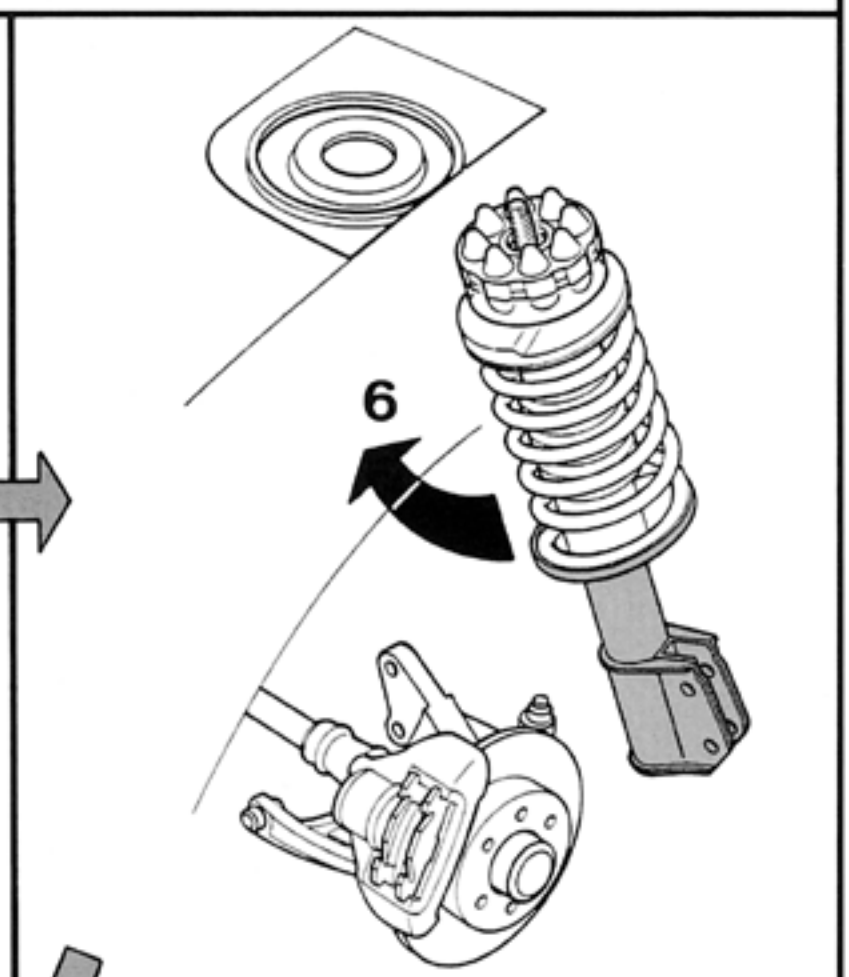

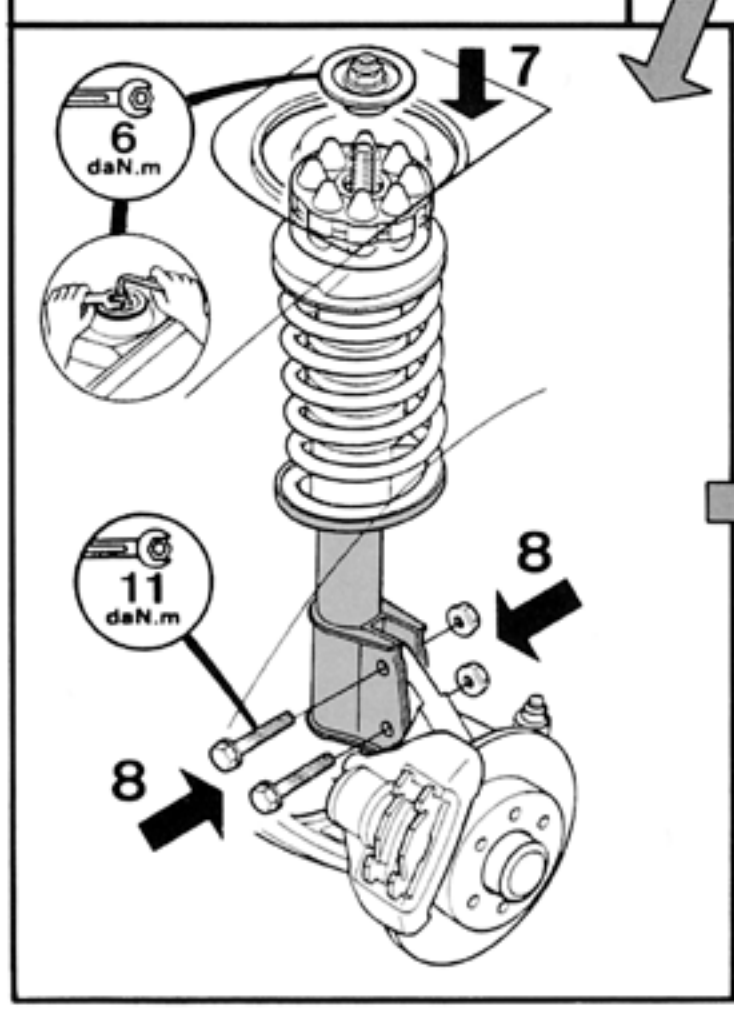

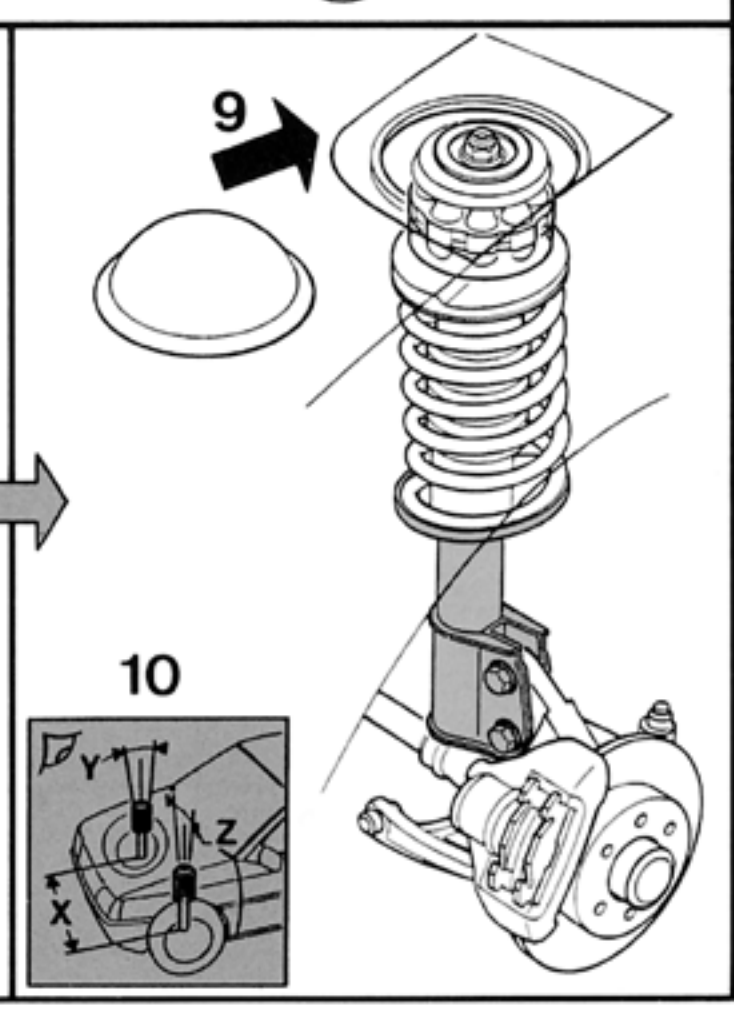

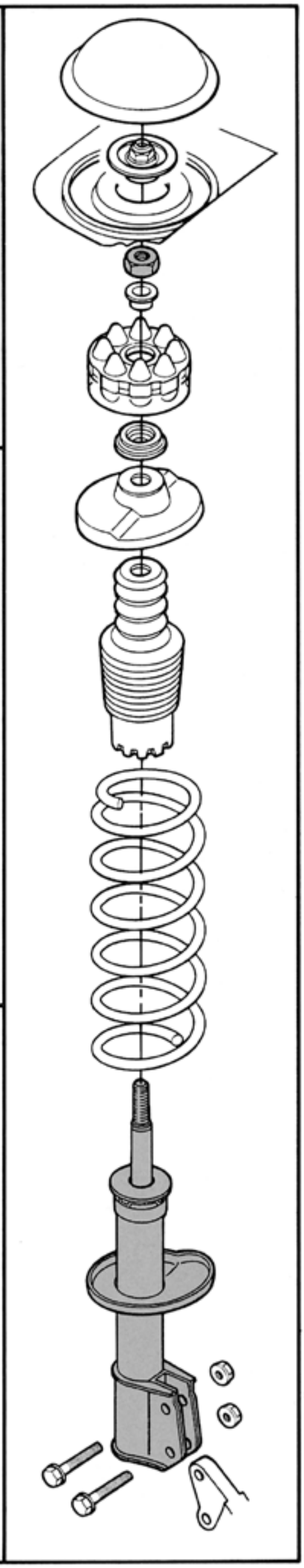

© Monroe all rights reserved