MONROE

T 0094

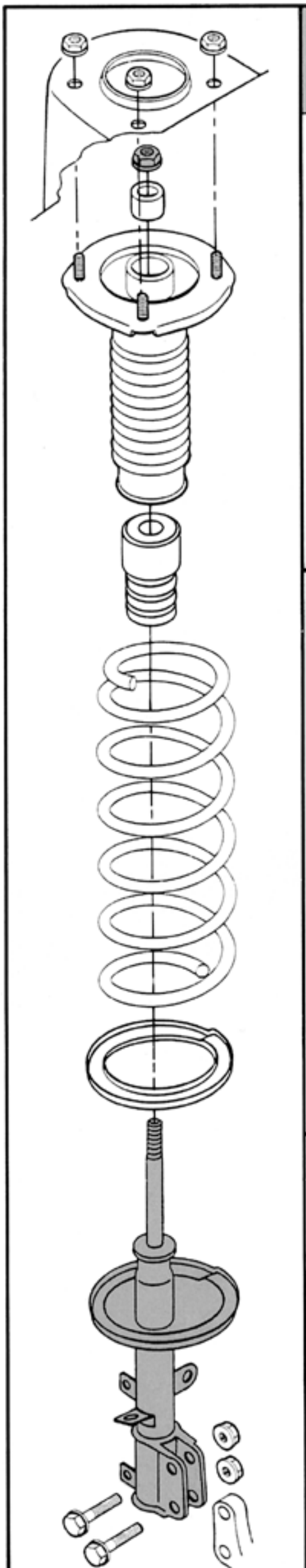

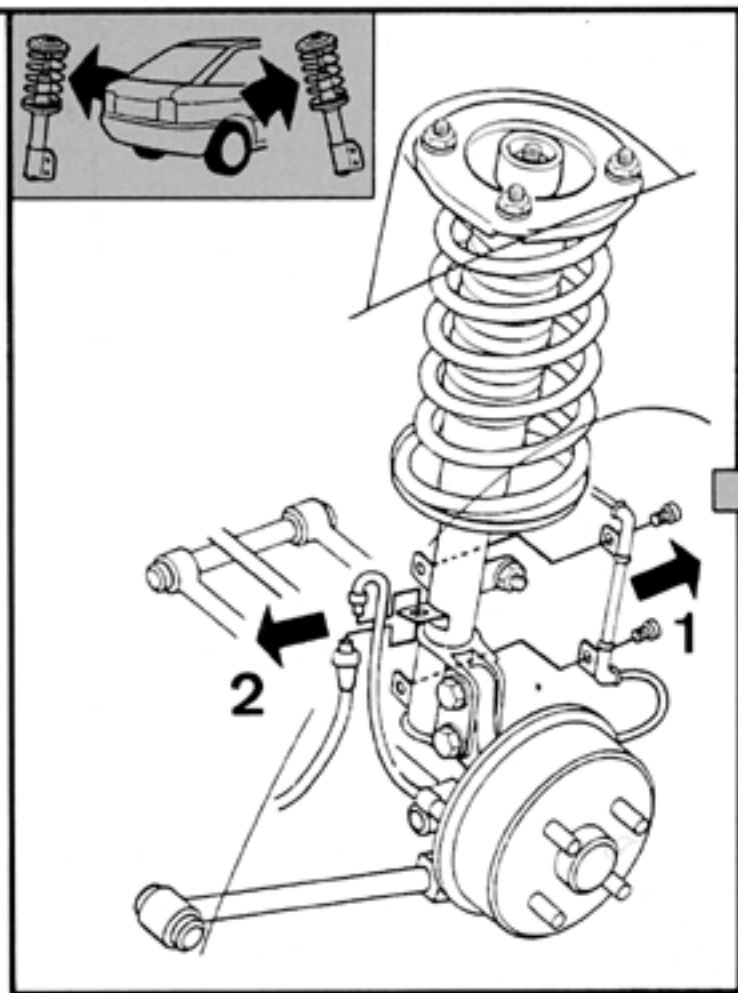

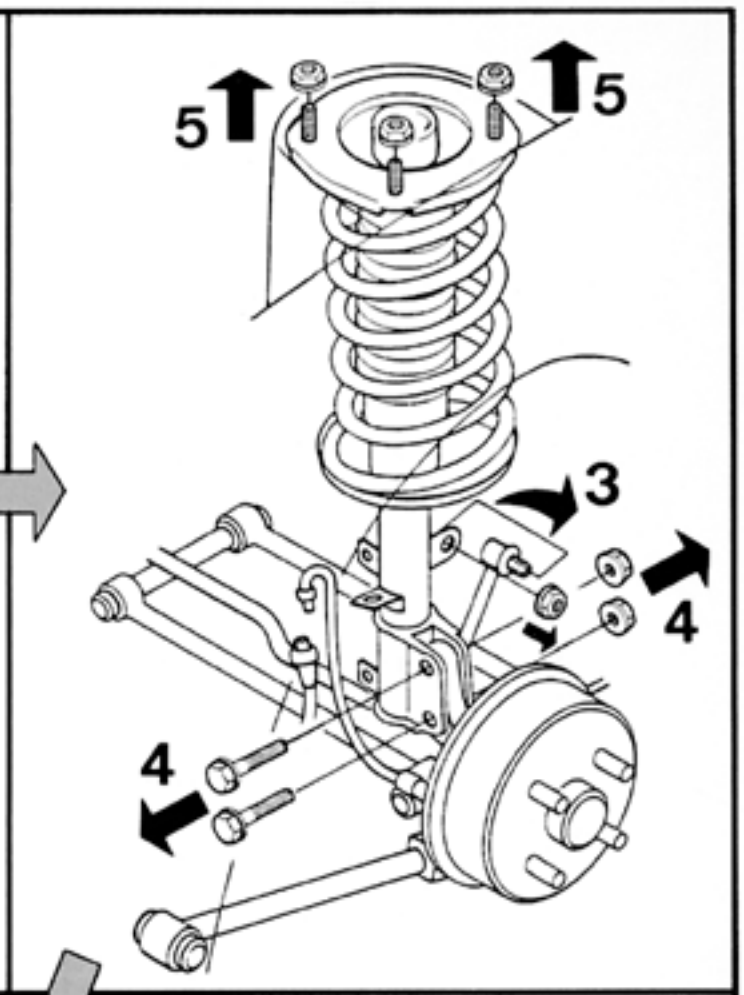

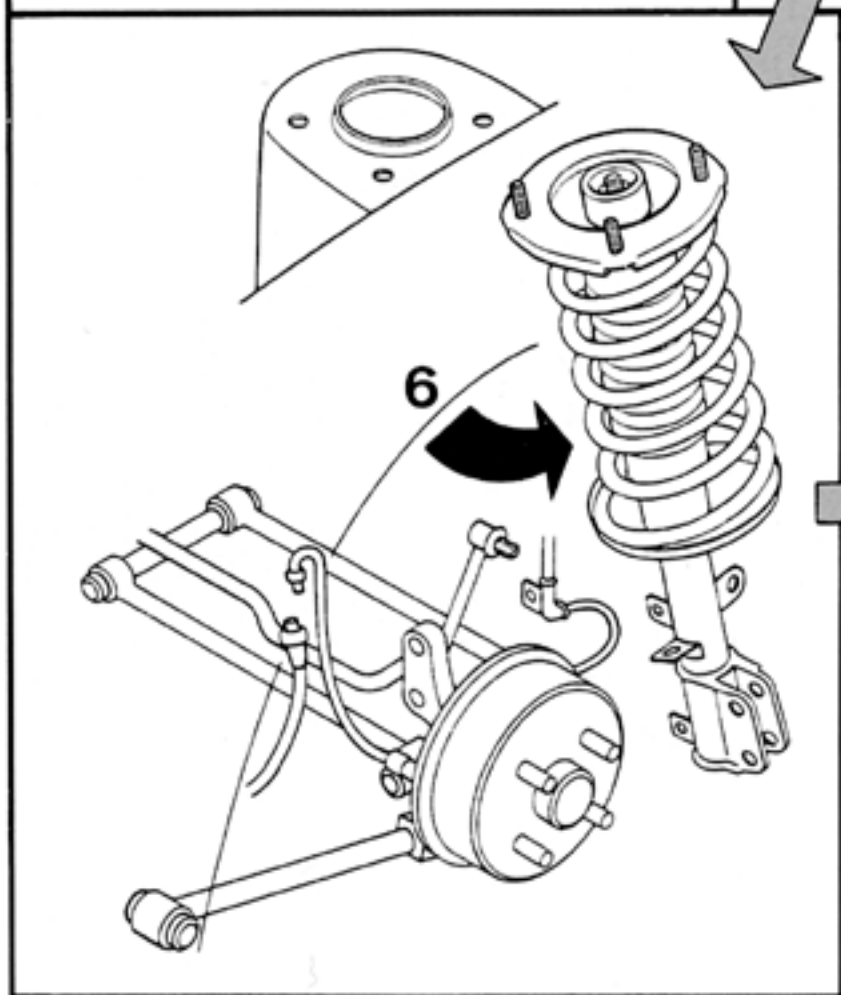

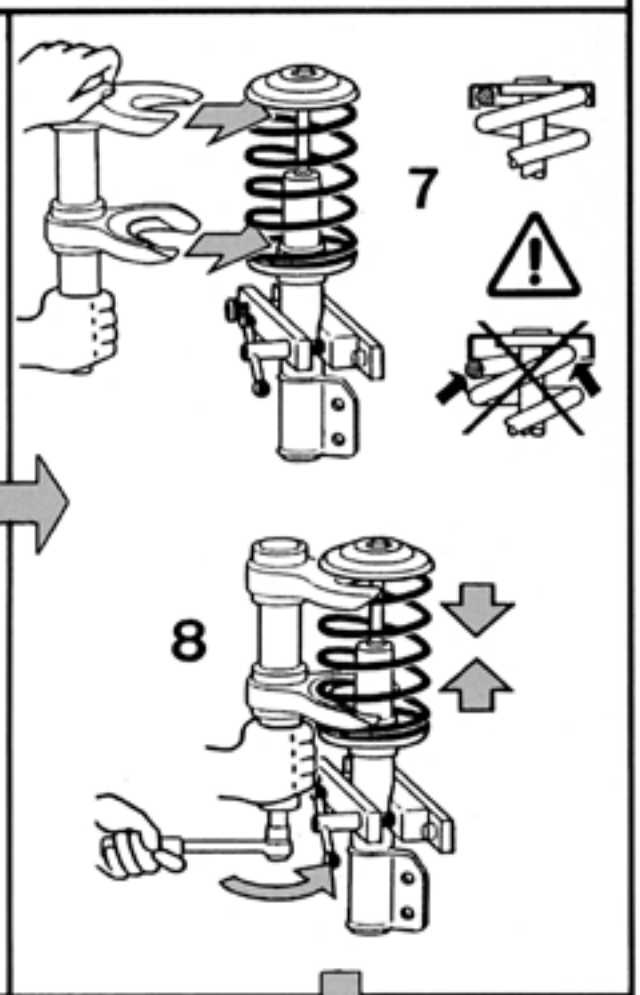

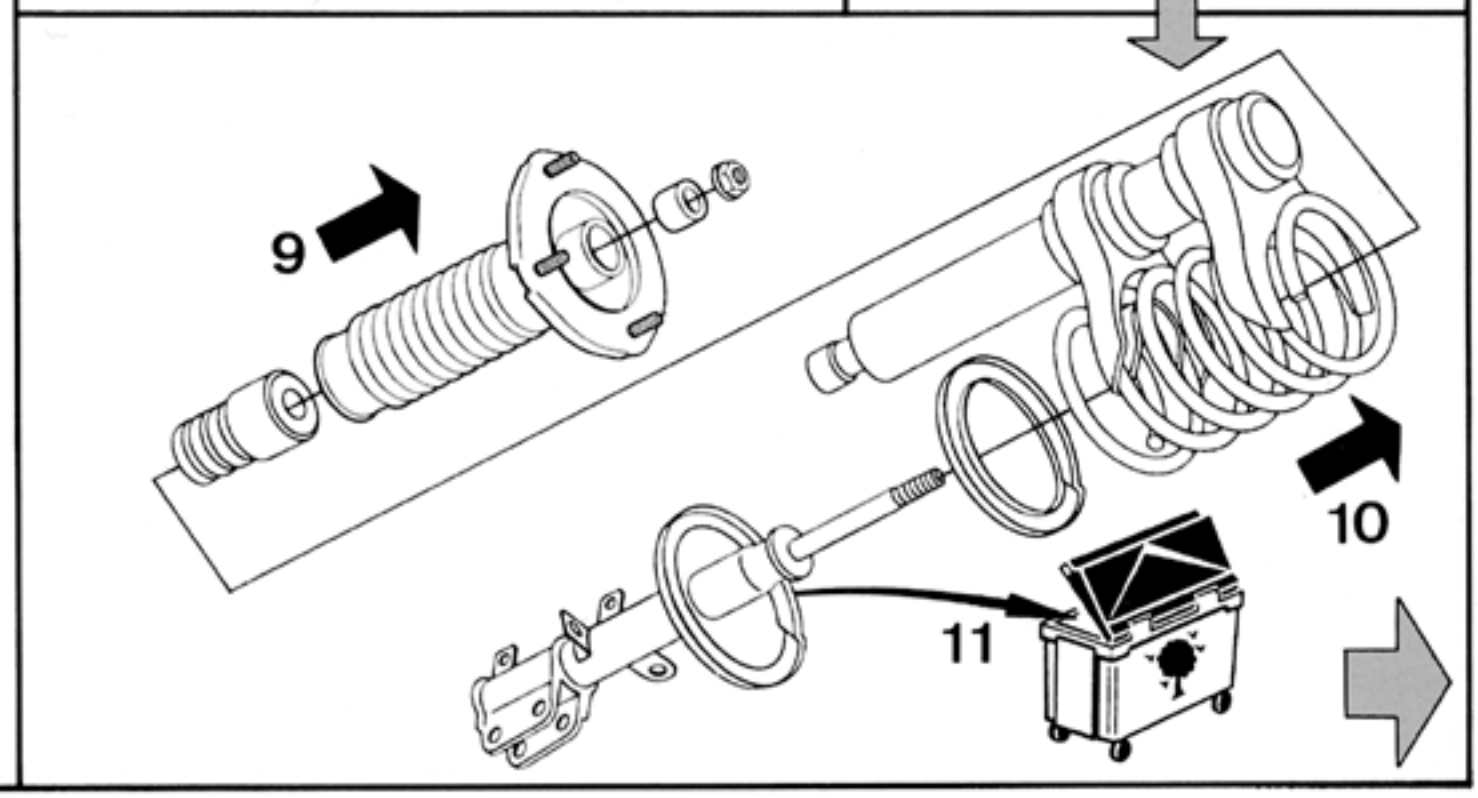

PRINTED IN BELGIUM 07/98

© Monroe all rights reserved