MONROE

T 0028

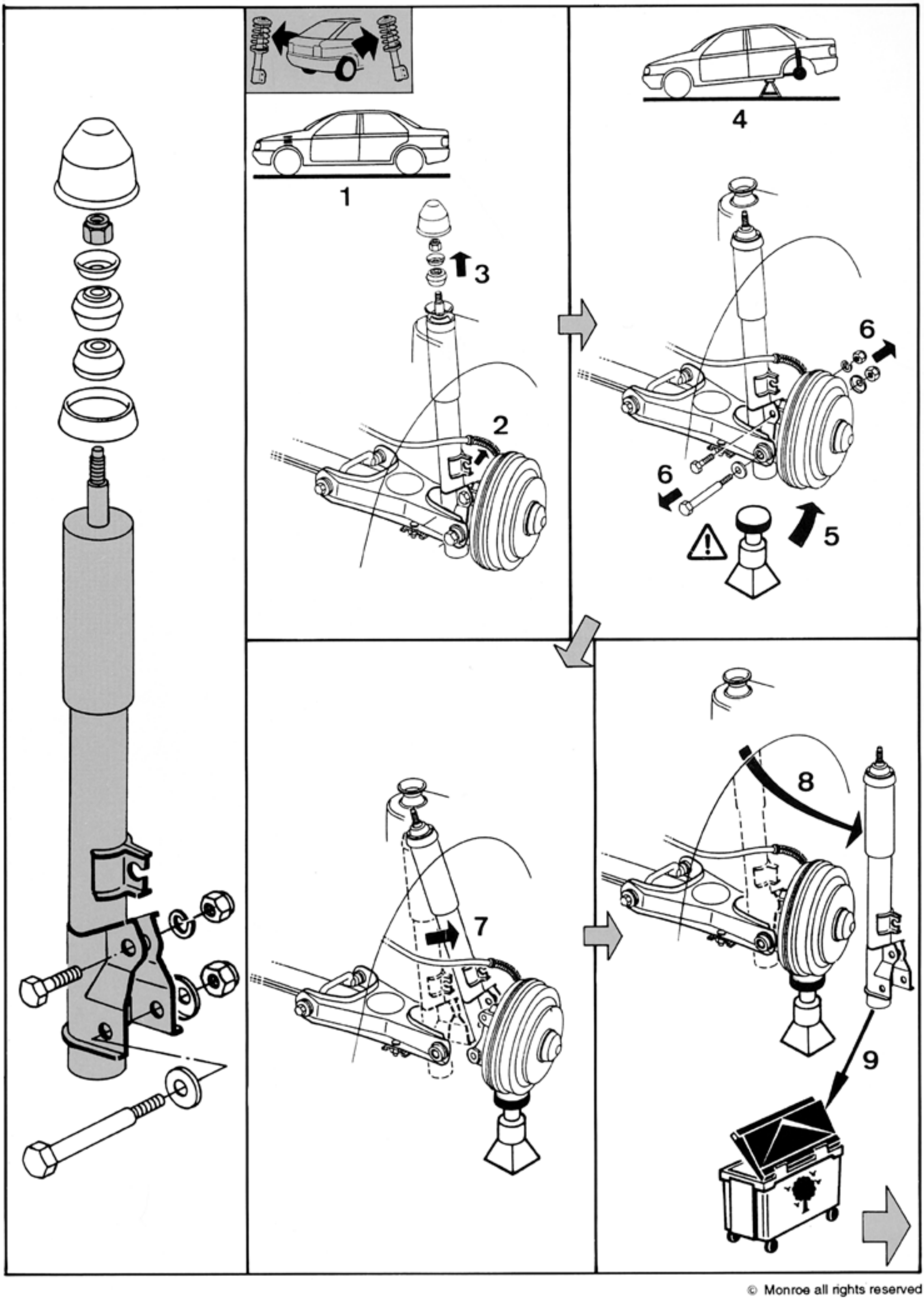

PRINTED IN BELGIUM 07/98

© Monroe all rights reserved